Fluoridation System Evaluation

Prepared for:

Village of Potsdam
Potsdam, New York

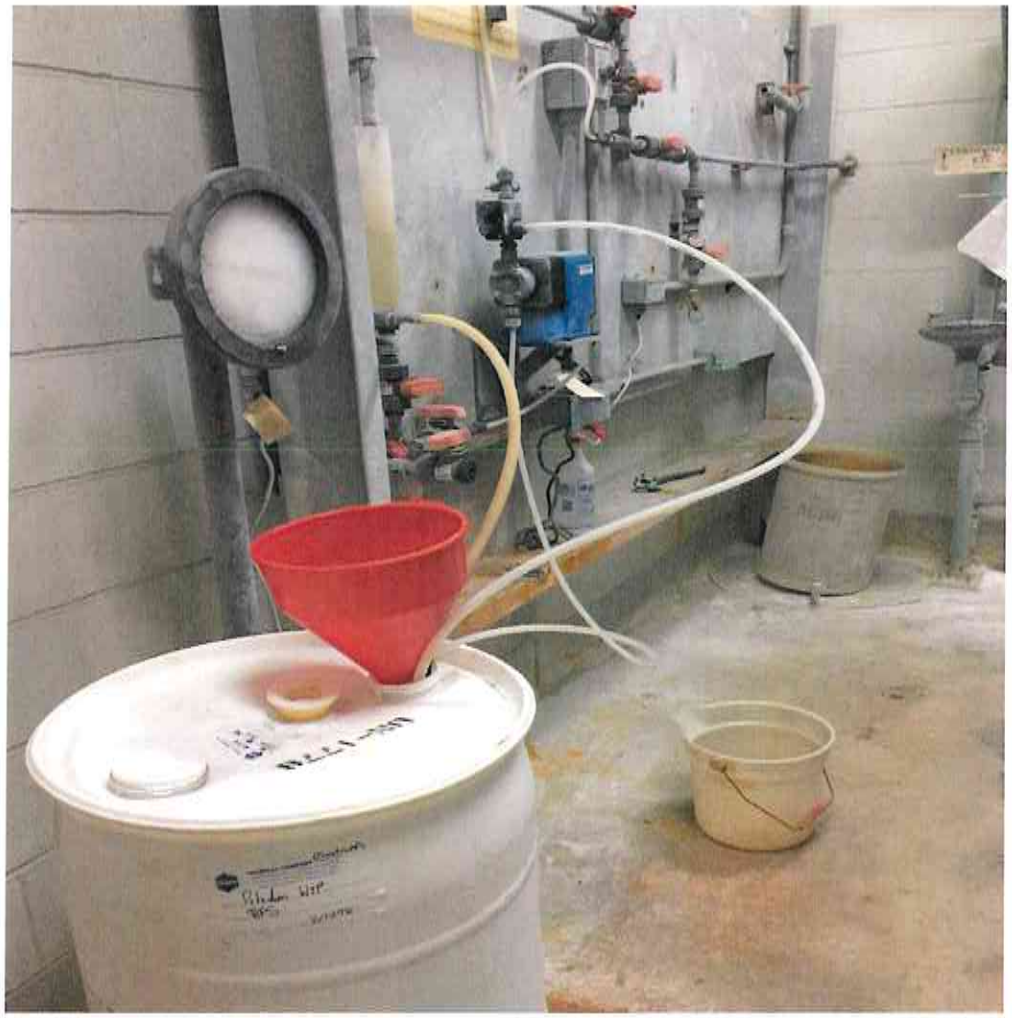

Prepared by:

Environmental Design & Research, Landscape Architecture,
Engineering & Environmental Services, D.P.C.
217 Montgomery Street, Suite 1000
Syracuse, New York 13202
P: 315.471.0688 F: 315.471.1061 www.edrdpc.com

STATE OF NEW YORK
MICHAEL E. TAMBLIN
073737
LICENSED PROFESSIONAL ENGINEER

August 2018

TABLE OF CONTENTS

LIST OF TABLES

LIST OF APPENDICES

1.0 INTRODUCTION

The New York State Department of Health (NYSDOH) supports fluoridation of drinking water as a method to enhance oral health by consumption. The addition of fluoride to drinking water adds low concentrations of fluoride to saliva which has been shown to reduce demineralization of tooth enamel and increase remineralization rates in the early stages of tooth decay (cavities). The NYSDOH recommends a maximum concentration of 0.7 mg/l or 0.7 parts per million (ppm) of fluoride in drinking water, with a maximum contaminant level (MCL) of 2.2 ppm to enhance oral health.

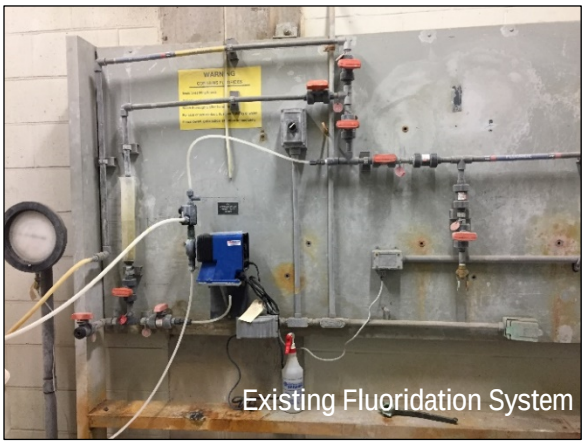
Existing Fluoridation System

The Village of Potsdam owns, operates and maintains various municipal services including two hydro-electric dams, stormwater management, wastewater treatment and water treatment facilities to provide consistent reliable service to the residential population of approximately 9,700 people. The Water Treatment Facility is located on Raymond Street in the Village center and draws water from upstream of one of the hydro-electric dams located on the Raquette River. The water treatment plant produced on an average day 1.06 million gallons (mgd) based on 2017 records. The plant is equipped with three high-lift pumps to convey water throughout the distribution system. Peak flow to the system is produced by operating two high-lift pumps. The flow rate with two pumps in operation was reported by plant staff to be 1500 gallons per minute (gpm).

As part of the overall water treatment system the plant is equipped with a fluoridation system which injects fluoride, in the form of 23% strength liquid hydroflousilic acid (FSA), prior to distribution to the Villages system. Fluoride is injected at a single location on the discharge header from the high-lift pumps. Potsdam's raw water has a background fluoride concentration of 0.2 mg/l. In order to achieve a distribution system residual concentration of 0.7 mg/l, fluoride is added at a concentration of 0.5 mg/l at the water treatment plant.

The fluoridation system utilizes 30-gallon (approx. 300 lbs.) drums of FSA, which are manually transferred to a scale in the fluoride storage and feed room. Three to four drums of fluoride are stored in the room at a single time and the scale is utilized by plant operations staff to measure daily usage of FSA. A diaphragm feed pump (replaced in 2016) transfers chemical from the drum through polyethylene and PVC piping to the feed point located in the adjacent pump room, approximately 15 feet away. A three-way valve on the pump discharge protects the system from overfeeding and siphoning.

Plant operations staff injects fluoride based on plant flow which is achieved through the high-lift pump flow meter which transmits a flow signal to the plant programable logic controller (PLC). The speed of the fluoride feed pump is varied based plant flow. Chemical usage at a water plant production flow of 1.06 mgd was reported to be approximately 3.8 gallons per day.

The fluoride storage and feed room is comprised of a concrete floor and ceiling, and block walls and is approximately 9-feet wide, 15-feet long, and 13-feet high. Entry into the room is via a 30-inch man door. Once the room is entered through the door, the floor ramps down into the room, which provides containment for chemical spills. The room is also equipped with an eyewash/shower unit, which are fed by a ¾ inch water line from the plant water system.

In addition to the fluoride feed system and eyewash/shower, the fluoride storage and feed room is equipped with supply and exhaust fans and ductwork to provide constant airflow while the room is occupied. Two fans, each capable of meeting the air flow requirements, are installed on both the supply and exhaust systems. The fans are operated in an alternating sequence to maintain system reliability. Based on the existing equipment information the exhaust fans are each rated at 500 cfm. Based on the room dimensions, the room has a total air volume of 1755 cubic feet which results in a ventilation rate of 17 air changes per hour which complies with 10 States Standards. The actual supply and exhaust fan airflows need to be verified field measured to validate that a that a negative pressure environment exists within the room. Supply air is discharged into the room approximately 9.5-feet above the floor and the exhaust ducts draw air from approximately 1-foot above the floor.

2.0 EXISTING CONDITIONS

FSA is a highly corrosive chemical, and due to the method of feeding the water system by utilizing drums, the opening on the top of the drums for suction piping allows vapor to escape into the room. The room equipment including scale, pipe support frame, metal ductwork, and electrical components, as well as the adjacent pump room show evidence of corrosion as a result of exposure to hydroflousilic acid vapor. The spool piece in the high lift pump discharge header also is corroded at the injection location. The most prevalent evidence of hydroflousilic exposure is a white residue build-up on the surfaces of adjacent equipment/walls and etching of glass located within the room and adjacent areas.

The scale, room ductwork, eyewash/shower, and electrical items have moderate to severe corrosion. The exterior windows in the pump room closest to the fluoride feed room door are showing signs of etching.

The fluoride is injected into the high lift pump discharge pipe header into a ductile iron spool piece. The plant also injects corrosion inhibitor and caustic feed for pH adjustment at this same location. The spool piece is moderately corroded on the exterior. The condition of the inside of the spool piece is unknown.


Existing Fluoridation System

The plant staff did not report any significant issues with the existing feed system operation with respect to reliability or overfeeding. The plant staff 's main concerns with the existing system include: handling of the 30-gallon (250 + pounds) drums, fumes that escape the drums due to the drum configuration, and the corrosion to the surrounding facilities. Table 1 represents a list of deficiencies identified with the fluoride feed and storage system.

TABLE 1 – FLUORIDE FEED SYSTEM DEFICIENCY LIST

Description	Condition Ranking (1=Poor; 3=Moderate; 5=Good)	Comments
Fluoride Scales	3	
Fluoride Feed Pump	4	New pump in 2016
Pipe/Valves	3	Signs of degradation
Supply and Exhaust Fans/Duct	3	Exhaust duct is metal and is corroded.
Electrical Systems	3	Signs of degradation
Windows/Doors	2	Etching of glass, gaps in door allow fluoride vapor to escape into adjacent rooms

3.0 ALTERNATIVE EVALUATION

In order to address the concerns related to the existing fluoridation system and storage room, an alternative evaluation was conducted which include a no action alternative, replacement of the existing system components in-kind, and installation of a new sodium fluoride (NAF) saturation system. Alternatives were assessed by comparing capital cost, O&M, asset life, and drinking water quality standards during construction.

Table 2 represents the advantages and disadvantages of the fluoridation system alternatives and provides a comparison based on information provided in this report and discussion with plant personnel. Each alternative includes replacement of piping, valves, electrical components, eyewash/shower, room and HVAC improvements.

TABLE 2 – COMPARISON OF FLUORIDE SYSTEM ALTERNATIVES

Option	Advantages	Disadvantages
No Action	• Lowest capital cost	• Potential failure of existing equipment • Degradation of ancillary equipment • Manually handling of liquid drums • Higher maintenance cost • Higher Safety Requirements
Replacement In-Kind	• Lower capital cost • Known operation	• Degradation of ancillary equipment • Manually handling of liquid drums • Higher maintenance cost • Higher Safety Requirements
Sodium Fluoride Saturation System	• Improved operator safety • Improved chemical handling • Reduced degradation of ancillary equipment • Lower maintenance cost	• Higher capital cost

The fluoride feed system equipment in the fluoride feed and storage room operates reliably based on discussions with plant operations staff. However, the use of FSA results in corrosion vapor escaping, corroding equipment and materials in the room. The alternatives evaluation considered ways to enhance operator safety and materials handling, replace aging and deteriorated equipment, provide reliable operation, and meet current regulatory requirements.

Further deterioration or failure of the deteriorated equipment or electrical/HVAC systems could result in an error in feeding of fluoride into the distribution system, compromise operator safety, and further impact the condition of the feed room and adjacent plant areas. Additionally, the operators expressed a need to improve chemical handling requirements and monitoring within the system. Therefore, the alternative of “No Action” was not considered feasible.

Replacement of the existing, deteriorated fluoridation system components and ancillary equipment and installation of a new fluoride saturation system were considered feasible alternatives. Replacement of existing system components and other equipment to allow continued use of FSA provides the advantages of known operational protocols for operators and has a lower capital cost. However FSA is known to change the pH level of water and increases the amount of supplemental addition of caustic feed required to be fed to the finished water. In addition there are safety concerns due to exposure to FSA and operators are required to manually handle chemical drums.

Installation of a new up flow sodium fluoride (NAF) saturation system has the advantages of enhancing operator safety, reduce the effects on pH levels in the finished water, and lower operation and maintenance cost. The system would utilize 50 lb. bags of granular sodium fluoride as an alternative to use of liquid FSA. Once the granular sodium fluoride is added to the saturation tank, the system is “closed” and less fluoride vapor escapes into the room. A constant level

of granular NAF is maintained in the saturation tank and makeup water is added either automatically or manually to a preset level. The chemical feed pump can be mounted on or closely adjacent to the tank with the pump suction line extending into the tank such that it draws solution above the level of the NAF granules.

Based on the current average plant flow, 8-9 bags of granular NAF would be required per month. There is sufficient space in the existing room for storage of the granular NAF. The existing feed pump would be replaced in order to accommodate the new feed rate required by switching to the saturation system. Table 3 represents the 20-year present worth of the two feasible options considered in regard to the fluoridation system replacement.

TABLE 3 – FLUORIDATION SYSTEM OPTIONS 20-YEAR PRESENT WORTH

Option	Capital Cost	O&M Cost	20-Year Present Worth(2)
Replacement In-Kind	$35,000 - $40,000	$8,900	$350,000
Sodium Fluoride Saturation System	$35,000 - $40,000	$4,000(1)	$210,000

(1) Additional cost savings are anticipated by a reduction in the required amount of caustic the plant currently feeds due to the change from FSA to NAF.
(2) Based on the upper range of Capital Cost and O&M cost estimates at an inflation rate of 4 percent.

4.0 RECOMMENDED IMPROVEMENTS

It is recommended that the Village of Potsdam perform the following work in order to provide necessary water treatment to consistently and reliably meet and maintain drinking water quality for the use of fluoride within the Village:

1. Replace the existing fluoridation system with a new continuous saturation fluoridation system including tanks and ancillary accessories.
2. Replace the existing chemical feed pump.
3. Replace the existing spool piece in the high lift pump discharge header where fluoride and other chemicals are injected. Provide new injection assemblies as required.
4. Replace the existing exhaust ductwork in the Fluoride Feed and Storage.
5. Clean and paint the Fluoridation Feed and Storage Room.
6. Replace existing electrical components with corrosive resistant materials and as required for the new fluoride feed equipment.
7. Replace existing plant water piping, valves, and emergency eyewash/ shower.
8. Extend plant water piping to feed the new saturator vessel, including backflow prevention and metering.
9. Replace the existing door to the Fluoride Feed and Storage Room.

Technical bulletins and data for the new system are provided as Attachment A to this memorandum.

Table 4 below shown below is an Engineer's Estimate of Probable Construction and Project Costs for the recommended improvements. The proposed improvements are shown on Figure 1.

Figure 1. Proposed Fluoride System Improvements

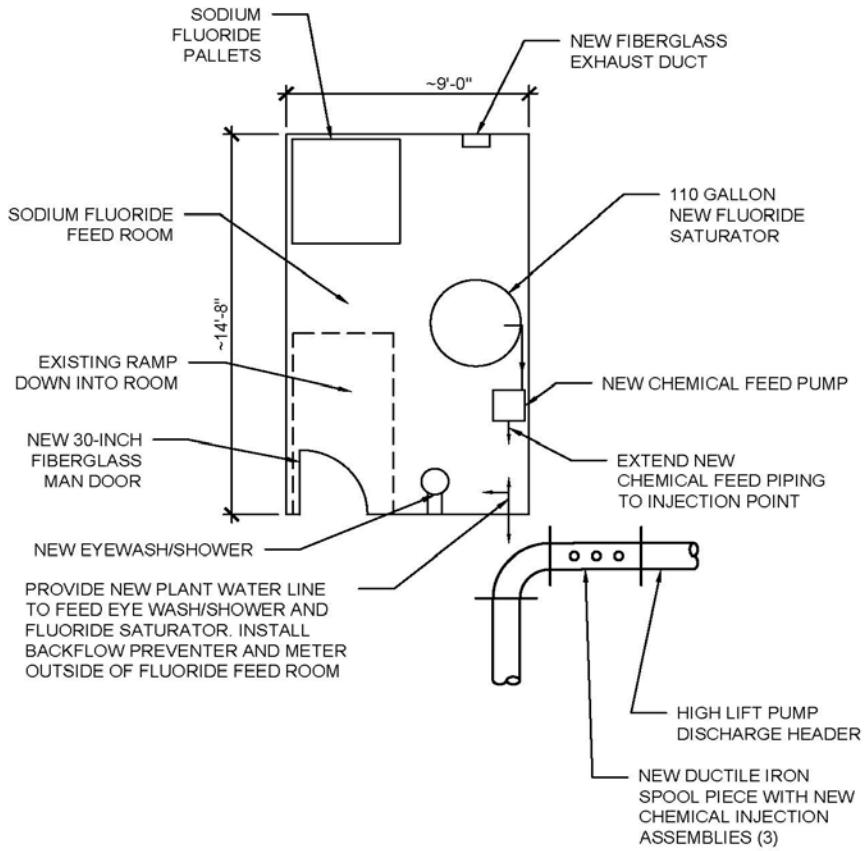

TABLE 4 – CAPITAL COST

Recommended Improvement	Opinion of Cost
Mobilization/demobilization	$1,500
Demolition	$2,500
Fluoridation System (Saturator and Chemical Feed Pump)	$10,000
Pipe, Valves and Fittings	$3,500
Eyewash and Shower	$1,500
Ductwork	$2,000
Interior Clean and Paint	$1,000
Door	$1,500
Backflow Preventer and Flowmeter	$4,000
Electrical Improvements	$3,000
Contingency (30%)	$9,500
Total Construction Cost	$40,000
Legal, Fiscal, Engineering (30%)	$12,000
TOTAL PROJECT COST (ROUNDED)	$55,000

5.0 PROJECT SCHEDULE

The projected schedule for the work, following notice of award and execution of an agreement, is as follows:

Preliminary Design Phase……...30 days
Client Review……..15 days
Final Design Phase……20 days
Bidding and Award Phase……..…45 days
Construction Phase……90 days
Construction Closeout and Punchlist……30 days

Total project duration is projected to be 230 days or 7-8 months.

6.0 ENVIRONMENTAL EVALUATION (SEQR)

The Fluoridation System Improvements Project will be reviewed per requirements of the State Environmental Quality Review Act (SEQR). This project consists of work at the Water Treatment Plant in Potsdam, NY. The work involves

replacement of equipment within an existing building structure. All of the project is anticipated to be conducted within the existing facility and no work is anticipated to be conducted on the exterior of the building

This project should be classified as a Type II action under SEQR, since it does not meet the requirements of a Type I action as specified in SEQR Regulation (6 NYCRR Part 617), Part 617.4 (Type I Actions), Paragraph (b). In addition, please note the following per SEQR Regulation (6 NYCRR Part 617), Part 617.5 (Type II Actions), Paragraph (c)(1):

"(c) The following actions are not subject to review under this Part:

(1) maintenance or repair involving no substantial changes in an existing structure or facility;"

Based on this information, the project should be classified as a Type II action. However, additional environmental reviews are anticipated in order meet standards of potential funding sources. It is suggested a coordinated review be performed due to potential involved agencies' concerns, interests, and comments. A coordinated review is a process under the SEQR Act in which all involved agencies perform an integrated, parallel environmental review. This will require the Village to be the lead agency per SEQR requirements. The involved agencies will submit their interests and concerns for consideration by the lead agency. They will then determine the significance of the interests and concerns in scoping of an Environmental Impact Statement if it is determined to be required under SEQR. The coordinated review process will commence upon completion of this technical memorandum.

7.0 CONTROLLING PROJECT COSTS

Project costs will be controlled through a number of measures during both the design and construction phases. Measures to be employed are as follows:

1. Perform detailed evaluation and verification of existing conditions during the design phase to limit the potential for encountering unforeseen conditions during construction.
2. Include multiple manufacturers for project components and equipment within the project specifications, where possible, to encourage competition with respect to component and equipment costs.
3. Advertise for public bids for the construction contract to encourage competition between multiple contractors.
4. Provide timely reviews and responses during construction with respect to submittals, shop drawings, requests for information, and changes.
5. Provide part time site engineering observation services during construction, as appropriate to the work occurring during different time periods.

APPENDIX A – CATALOG INFORMATION

InformationSheet

Fluoride Saturator
Model No. 28850

- *Up-Flow Design*
- *Low Maintenance*
- *Continuous Duty*
- *Integrated Cover Assembly*
- *Fluoridate Water Flows to 10,000 GPM*

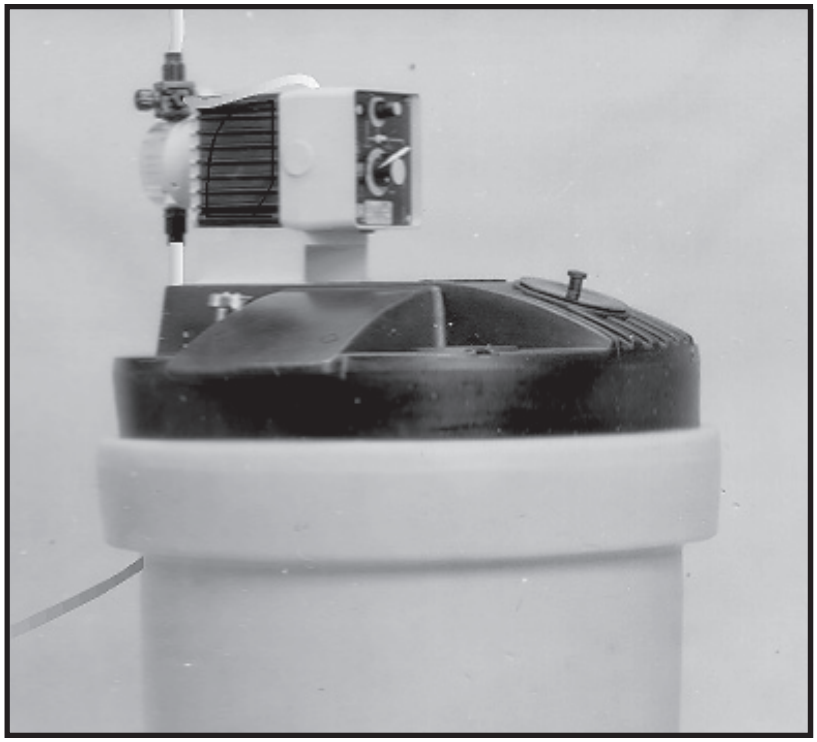

LMI
MILTON ROY

201 Ivyland Road
Ivyland, PA 18974 USA
TEL: 215-293-0401
FAX: 215-293-0445
http://www.lmipumps.com

Replaces same of Rev.C 3/98
1076.D 1/04

Instruction **Sheet**

Fluoride Saturator
Model No. 28850

- ***Automatic Solution Level Control – Continuous Duty***
- ***Up-Flow Design – Minimal Maintenance***
- ***Molded Polyethylene Cover – Component Protection***
- ***Compact – Economical – Easily Installed***
- ***For Sodium Fluoride***

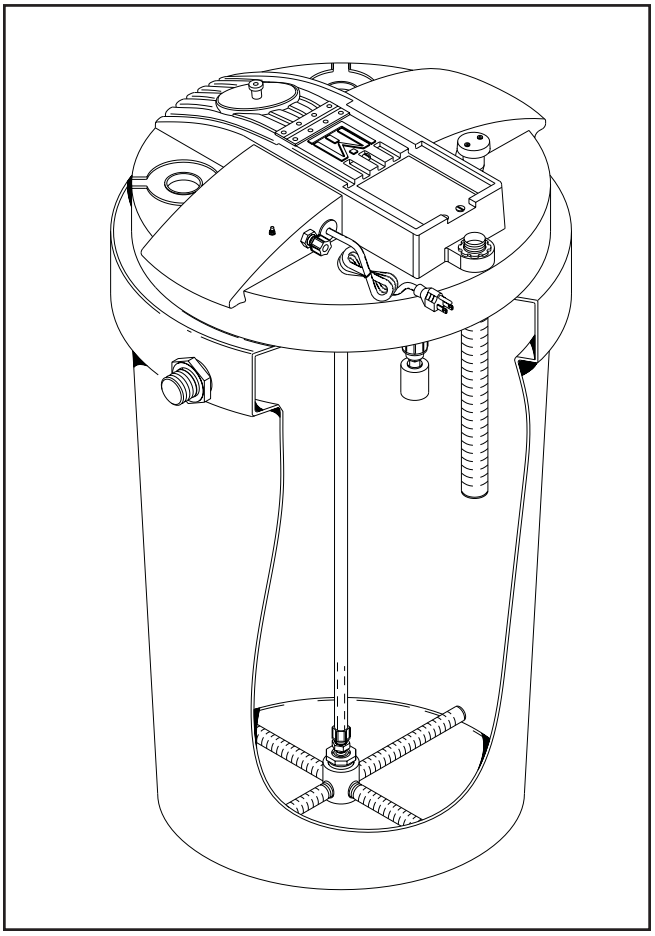

Component Parts

Tank Cover

- Tank cover with hinged fill hatch cover, pump mounting recess on molded polyethylene cover.
- Water inlet for .375" OD polyethylene 10 ft (3 m) tubing included
- Syphon breaker
- Solenoid valve - Flow control, 115 VAC
- Liquid level switch, 12 VAC
- Suction tube strainer, PVC
- Six (6) foot power cord

Distributor Tube Assembly

- Flexible vinyl tubing connector, from water inlet control to distributor
- Rigid PVC anti-rise pipe
- Distributor tubes, rigid PVC

Tank Assembly

- Fifty (50) gallon tank, yellow polyethylene
- 3/4" NPT female connection

Operation

Design Simplicity

The LMI sodium fluoride saturator provides an easily maintained source of saturated sodium fluoride solution; the unit is designed for efficiency economy, ease of installation and minimal maintenance. The complete saturator assembly includes cover, distributor tube assembly and tank.

Integrated Cover Assembly

The cover consists of a tank cover which houses the saturator components, including solenoid valve, syphon breaker, and liquid level switch. In addition, the cover also provides a suction tube strainer, recess for pump mounting and a hinged fill hatch cover. Push button light switch allows for visual inspection of fluoride bed level.

Up-Flow Saturation

The integrally mounted liquid level switch controls solenoid valve operation to maintain a proper solution level in the tank. The distributor tube assembly supplies fresh water to a bed of sodium fluoride at tank bottom. Water, dispersed by the distributor tubes 'flows up' through and dissolves the powder/crystals of sodium fluoride to provide a saturated (4%) solution.

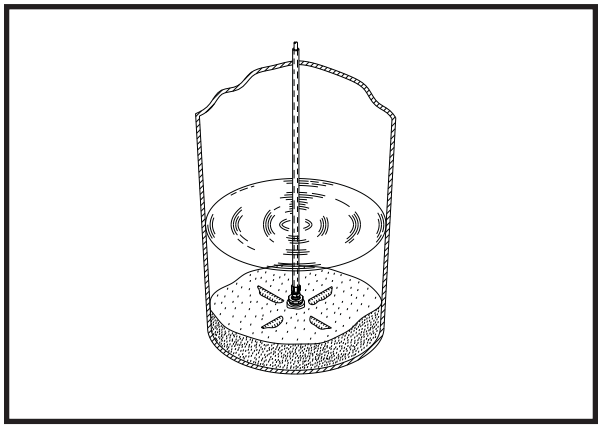

Metering Pump

LMI chemical metering pumps can be conveniently mounted in the recess provided on the saturator cover assembly. Pumps with liquid handling assembly materials of Hypalon, PVC and acrylic are generally recommended for pumping sodium fluoride solution.

Series A1, A9, B7, B9, C7 and C9 pumps can be used for addition of sodium fluoride solution with constant water flow rate applications.

Series A7, B7 and C7 pumps can be used with applications requiring automatic output control either with an LMI RFP flowmeter for flow proportional treatment or with an LMI Liquitron current to frequency converter for instrument responsive proportional treatment.

Solution Tank

The fifty (50) gallon tank is UV light resistant, yellow polyethylene, with tapered sides, five (5) gallon graduate marking, and is complete with overflow connection installed.

Typical Installation

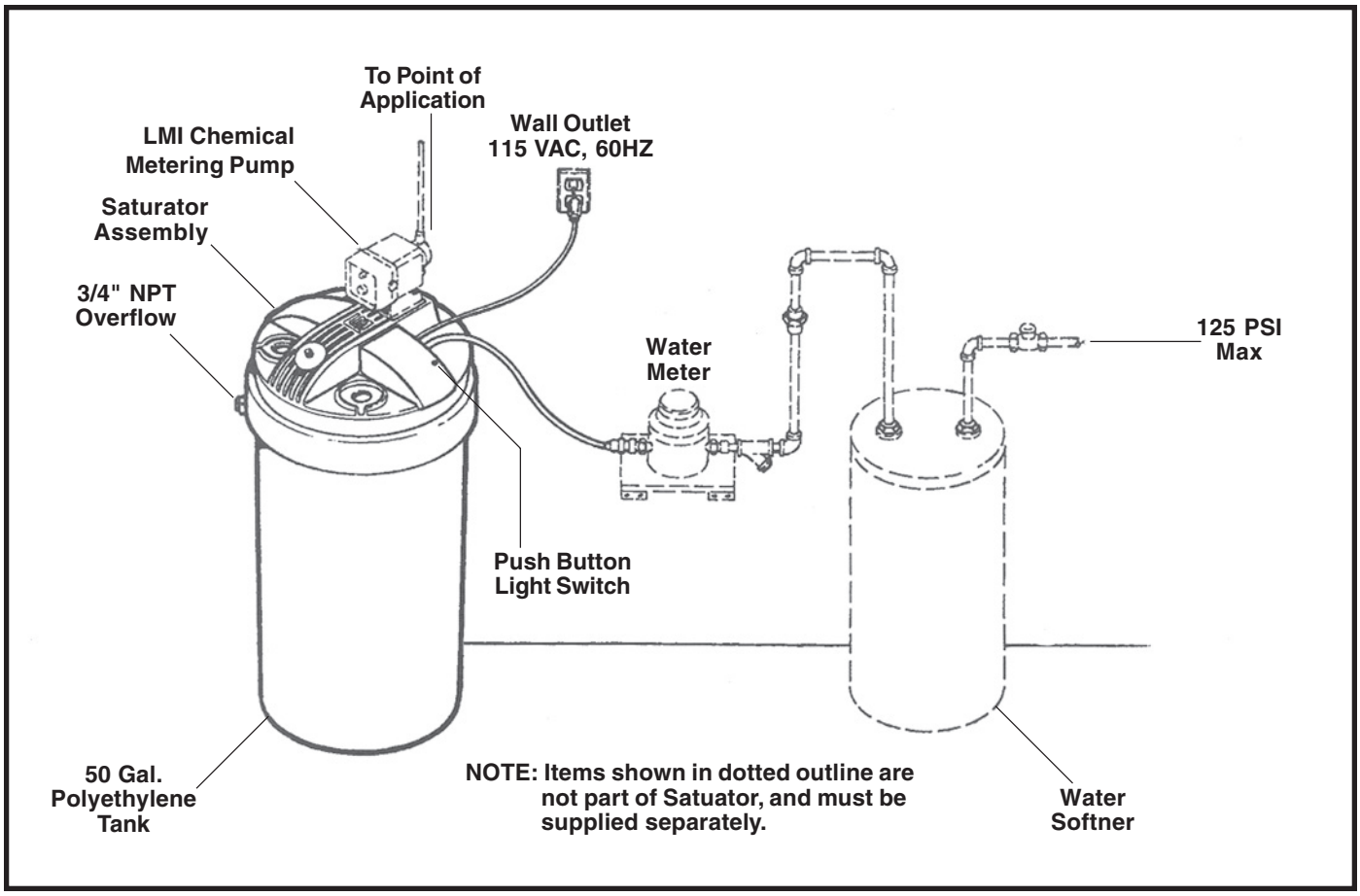

Dimensions

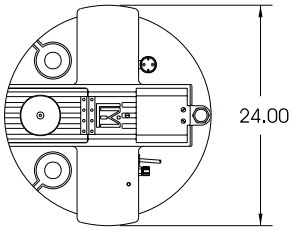

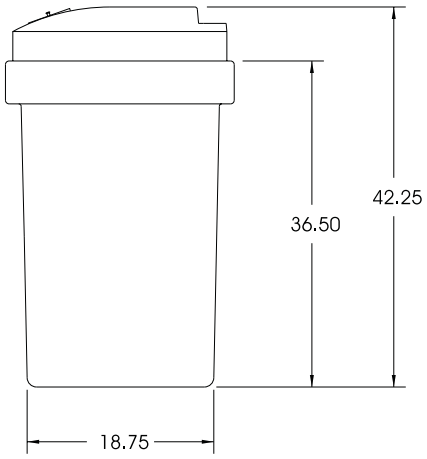

Shipping Dimensions:	24 x 24 x 47 in (609 x 609 x 1192 mm)
Shipping Weight:	37 lbs (16.8 kg)
Power Requirements:	During fill cycle only, 115 VAC, 60 Hz, 25 watts

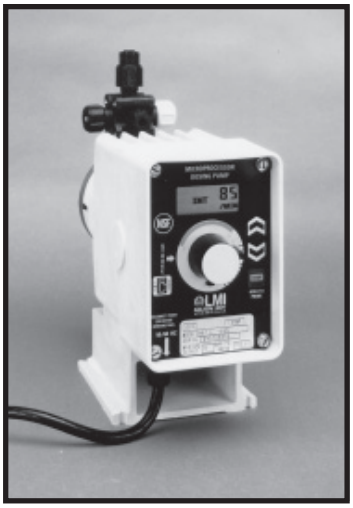

For Instrument Responsive Proportional Feed

For Automatic Flow Proportional Feed

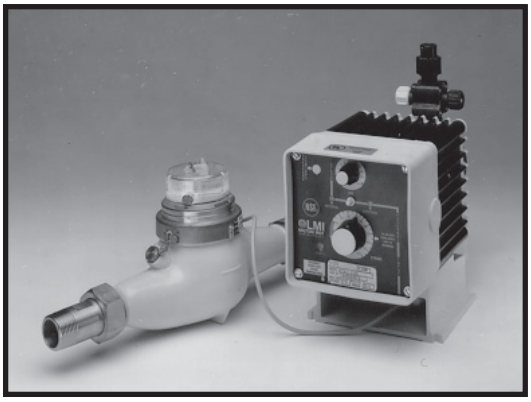

Data Sheet
Series C
Electronic Metering Pumps

Configuration Data

Model C92 1 - 363SI

Control & Output Code with Standard Liquid End

Manual Control
Speed (stroking frequency) and stroke length manually adjustable.

C10	--	1.3 GPH	(4.9 l/h)	... 300 psi	(20.7 Bar)
C11	--	2.5 GPH	(9.5 l/h)	... 150 psi	(10.3 Bar)
C12	--	4.0 GPH	(15.1 l/h)	... 100 psi	(6.9 Bar)
C13	--	8.0 GPH	(30 l/h)	..... 60 psi	(4.1 Bar)
C14	--	20 GPH	(76 l/h)	..... 25 psi	(1.7 Bar)

Instrument Responsive/Manual Control
Manual adjustment features of C1 Series plus switch conversion to external control for automatic systems.

C70	--	1.3 GPH	(4.9 l/h)	... 300 psi	(20.7 Bar)
C71	--	2.5 GPH	(9.5 l/h)	... 150 psi	(10.3 Bar)
C72	--	4.0 GPH	(15.1 l/h)	... 100 psi	(6.9 Bar)
C73	--	8.0 GPH	(30 l/h)	..... 60 psi	(4.1 Bar)
C74	--	20 GPH	(76 l/h)	..... 25 psi	(1.7 Bar)
C76*	--	4.0 GPH	(15.1 l/h)	... 175 psi	(12.1 Bar)
C77*	--	10 GPH	(38 l/h)	..... 80 psi	(5.5 Bar)
C78*	--	25 GPH	(95 l/h)	..... 30 psi	(2.07 Bar)
C90	--	1.3 GPH	(4.9 l/h)	... 300 psi	(20.7 Bar)
C91	--	2.5 GPH	(9.5 l/h)	... 150 psi	(10.3 Bar)
C92	--	4.0 GPH	(15.1 l/h)	... 100 psi	(6.9 Bar)
C93	--	8.0 GPH	(30 l/h)	..... 60 psi	(4.1 Bar)
C94	--	20 GPH	(76 l/h)	..... 25 psi	(1.7 Bar)

Voltage Code

1 ------ 120 VAC US Plug
2 ------ 240 VAC US Plug
3 ------ 220-240 VAC DIN Plug
5 ------ 240-250 VAC, UK Plug
6 ------ 240-250 VAC, AUST/NZ Plug
7 ------ 220-240 VAC, SWISS Plug

Liquid End

See next page for complete liquid end specifications and selection.

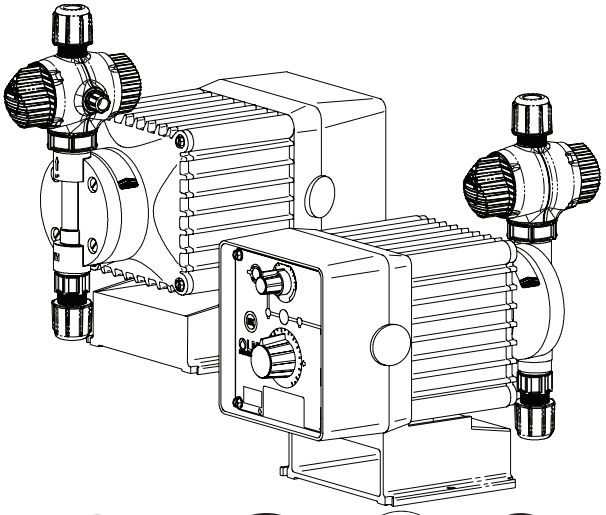

Certified to NSF/ANSI 61 & 372

Certified to NSF/ANSI Standard 50

Dimensions

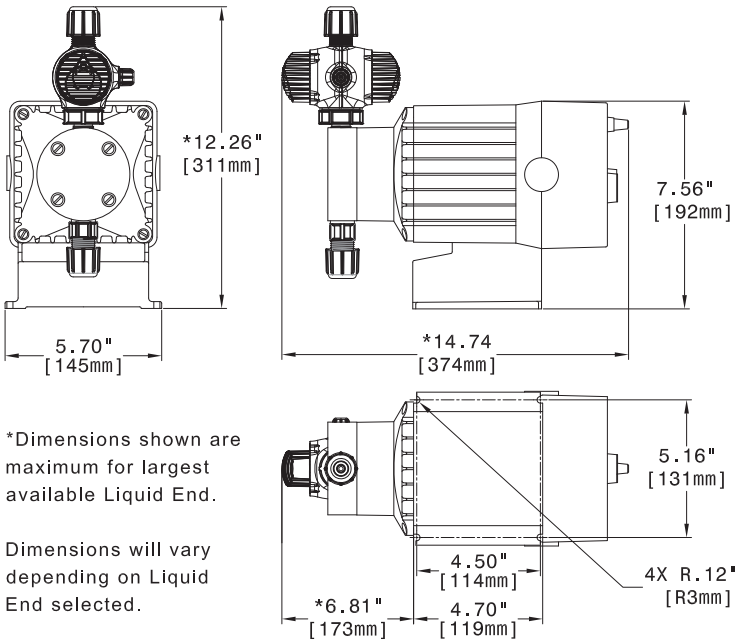

*Dimensions shown are maximum for largest available Liquid End.

Dimensions will vary depending on Liquid End selected.

Specifications

Series	Strokes Per Minute (Adjustable) Min	Max	Stroke Length (Adjustable) Recommended Minimum	Average Input Power @Max Speed	Shipping Weight
C10, C70, C90 C11, C71, C91 C12, C72, C92 C13, C73, C93 C14, C74, C94	1	100	10%	44 watts	20 lbs (9.1 kg)
C76** C77** C78**	1	100	10%	87 watts	28 lbs (12.7 kg)

** Not UL or CUL Approved

LMI

201 Ivyland Road
Ivyland, PA 18974 USA
TEL: (215) 293-0401
FAX: (215) 293-0445
http://www.lmipumps.com

Replaces same of Rev.K 2/2012
1712.L 11/2014

Standard Liquid End Configuration Data & Materials of Construction

Drive Assembly	Liquid End No.	Size Code	Materials of Construction: Head & Fittings	Balls	Liquiframm™	Check Valve	Accessory	Tubing & Connections: Discharge	Suction
C90, C70 ■ -	498SP	0.9	PVC	Ceramic	Fluorofilm™	PVDF/PTFE	4FV	Pipe 1/2" NPT M	
C10 ■ -	297	0.9	316 S.S.	316 S.S.	Fluorofilm™	316 S.S.		Pipe 1/4" NPT M	
	468SI†	1.8	PVC/PVC	Ceramic	Fluorofilm™	PVDF/Polyprel®	4FV	PE .375" O.D.	
	460SI†	1.8	Acrylic/PVC	Ceramic	Fluorofilm™	PVDF/Polyprel®	4FV	PE .375" O.D.	
C92 ■ -	469SI†	1.8	Acrylic/PVDF	PTFE	Fluorofilm™	PVDF/Polyprel®	4FV	PE .375" O.D.	
C91 ■ -	368SI†	1.8	PVC/PVC	Ceramic	Fluorofilm™	PVDF/Polyprel®	4FV	PE .375" O.D.	
C72 ■ -	362SI†	1.8	PVDF/PVDF	Ceramic	Fluorofilm™	PVDF/Polyprel®	4FV	PE .375" O.D.	
C71 ■ -	363SI†	1.8	PVDF/PVDF	Ceramic	Fluorofilm™	PVDF/PTFE	4FV	PE .375" O.D.	
C12 ■ -	465SI†	1.8	Polypropylene	Ceramic	Fluorofilm™	PVDF/PTFE	4FV	PE .375" O.D.	
C11 ■ -	75HV	1.8	Polypropylene	316 S.S.	Fluorofilm™	PTFE		PE .5" O.D.	Vinyl .938" O.D.
	76HV	1.8	Acrylic/PP	316 S.S.	Fluorofilm™	Viton®		PE .5" O.D.	Vinyl .938" O.D.
	277	1.8	316 S.S.	316 S.S.	Fluorofilm™	316 S.S.		Pipe 1/4" NPT M	
	312SI#†	3.0	PVDF/PVDF	Ceramic	Fluorofilm™	PVDF/Polyprel®	4FV	PE .5" O.D.	
	313SI#†	3.0	PVDF/PVDF	Ceramic	Fluorofilm™	PVDF/PTFE	4FV	PE .5" O.D.	
	318SI#†	3.0	PVC/PVC	Ceramic	Fluorofilm™	PVDF/Polyprel®	4FV	PE .5" O.D.	
	410SI#†	3.0	Acrylic/PVC	Ceramic	Fluorofilm™	PVDF/Polyprel®	4FV	PE .5" O.D.	
	415SI#†	3.0	Polypropylene	Ceramic	Fluorofilm™	PVDF/PTFE	4FV	PE .5" O.D.	
C93 ■ -	418SI#†	3.0	PVC/PVC	Ceramic	Fluorofilm™	PVDF/Polyprel®	4FV	PE .5" O.D.	
C73 ■ -	419SI#†	3.0	Acrylic/PVDF	PTFE	Fluorofilm™	PVDF/Polyprel®	4FV	PE .5" O.D.	
C13 ■ -	20	3.0	Acrylic/PVC	Ceramic	Fluorofilm™	Viton®		PE .5" O.D.	
	20HV	3.0	Acrylic/PP	316 S.S.	Fluorofilm™	Viton®		PE .5" O.D.	Vinyl .938" O.D.
	20S	3.0	Acrylic/PVC	Ceramic	Fluorofilm™	Viton®	4FV	PE .5" O.D.	Vinyl .5" O.D.
	24	3.0	PVC	Ceramic	Fluorofilm™	PTFE		Pipe 1/2" NPT M	
	25HV	3.0	Polypropylene	316 S.S.	Fluorofilm™	PTFE		PE .5" O.D.	Vinyl .938" O.D.
	26	3.0	PVC	Ceramic	Fluorofilm™	Viton®		PE .5" O.D.	
	26S	3.0	PVC	Ceramic	Fluorofilm™	Viton®	4FV	PE .5" O.D.	
	27	3.0	316 S.S.	316 S.S.	Fluorofilm™	PTFE		Pipe 1/2" NPT M	
	29	3.0	UHMW PE	Ceramic	Fluorofilm™	Viton®		PE .5" O.D.	
	30	6.0	Acrylic/PVC	Ceramic	Fluorofilm™	PTFE		PE .5" O.D.	Vinyl .5" O.D.
C94 ■ -	34	6.0	PVC	Ceramic	Fluorofilm™	PTFE		Pipe 1/2" NPT M	
C78 ■ -	35P	6.0	Polypropylene	Ceramic	Fluorofilm™	PTFE		Pipe 1/2" NPT M	
C74 ■ -	35T	6.0	Polypropylene	Ceramic	Fluorofilm™	PTFE		PE .5" O.D.	
C14 ■ -	36	6.0	PVC	Ceramic	Fluorofilm™	PTFE		PE .5" O.D.	
	37	6.0	316 S.S.	316 S.S.	Fluorofilm™	PTFE		Pipe 1/2" NPT M	
	468SP	1.8	PVC/PVC	Ceramic	Fluorofilm™	PVDF/Polyprel®	4FV	Pipe 1/2" NPT M	
C76 ■ -	74S	1.8	PVC	Ceramic	Fluorofilm™	PTFE	4FV	Pipe 1/4" NPT M	
	277	1.8	316 S.S.	316 S.S.	Fluorofilm™	316 S.S.		Pipe 1/4" NPT M	
	20	3.0	Acrylic/PVC	Ceramic	Fluorofilm™	Viton®		PE .5" O.D.	
	20HV	3.0	Acrylic/PP	316 S.S.	Fluorofilm™	Viton®		PE .5" O.D.	Vinyl .938" O.D.
	20S**	3.0	Acrylic/PVC	Ceramic	Fluorofilm™	Viton®	4FV	PE .5" O.D.	Vinyl .5" O.D.
C77 ■ -	24	3.0	PVC	Ceramic	Fluorofilm™	PTFE		Pipe 1/2" NPT M	
	25HV	3.0	Polypropylene	316 S.S.	Fluorofilm™	PTFE		PE .5" O.D.	Vinyl .938" O.D.
	25P	3.0	Polypropylene	Ceramic	Fluorofilm™	PTFE		Pipe 1/2" NPT M	
	25T	3.0	Polypropylene	Ceramic	Fluorofilm™	PTFE		PE .5" O.D.	
	26S**	3.0	PVC	Ceramic	Fluorofilm™	Viton®	4FV	PE .5" O.D.	
	27	3.0	316 S.S.	316 S.S.	Fluorofilm™	PTFE		Pipe 1/2" NPT M	
	29	3.0	UHMW PE	Ceramic	Fluorofilm™	Viton®		PE .5" O.D.	

Output Information with Standard Liquid End

Series	Gallons per Hour Min	Gallons per Hour Max	Liters per Hour Min	Liters per Hour Max	mL/cc per Minute Min	mL/cc per Minute Max	mL/cc per Stroke Min	mL/cc per Stroke Max	Maximum Injection Pressure
C10, C70*, C90*	0.001	1.3	0.005	4.9	0.08	82	0.08	0.82	300 psi (20.7 Bar)
C11, C71*, C91*	0.003	2.5	0.010	9.5	0.16	158	0.16	1.58	150 psi (10.3 Bar)
C12, C72*, C92*	0.004	4.0	0.015	15.1	0.25	252	0.25	2.52	100 psi (6.9 Bar)
C13, C73*, C93*	0.008	8.0	0.030	30.0	0.51	505	0.51	5.05	60 psi (4.1 Bar)
C14, C74*, C94*	0.020	20.0	0.076	76.0	1.26	1262	1.26	12.62	25 psi (1.7 Bar)
C76*	0.004	4.0	0.015	15.1	0.25	252	0.25	2.52	175 psi (12.1 Bar)
C77*	0.010	10.0	0.038	38.0	0.63	631	0.63	6.31	80psi (5.5 Bar)
C78*	0.025	25.0	0.095	95.0	1.58	1577	1.58	15.77	30 psi (2.07 Bar)

*Minimum output is based on 1 stroke per minute and 10% stroke setting, minimum output can be reduced further in external mode. Series C9 pumps may be programmed for strokes per hour for lower outputs.

AutoPrime™ Liquid End Configuration Data & Materials of Construction

Drive Assembly	Liquid End No.	Size Code	Head & Fittings	Balls	Liquiframm™	Check Valve	Accessory	Tubing & Connections
C11, C71, C91	D60HI	1.8	Acrylic/PVC	Ceramic	Fluorofilm™	PVDF/Polyprel®	4FV	PE .375" O.D.
C12, C72, C92	D68HI	1.8	PVC/PVC	Ceramic	Fluorofilm™	PVDF/Polyprel®	4FV	PE .375" O.D.
C13, C73, C93	D10HI	3.0	Acrylic/PVC	Ceramic	Fluorofilm™	PVDF/Polyprel®	4FV	PE .5" O.D.
	D18HI	3.0	PVC/PVC	Ceramic	Fluorofilm™	PVDF/Polyprel®	4FV	PE .5" O.D.

Output Information – AutoPrime™ Liquid Ends (Liquid end models beginning with "D")

Series	Maximum Output: GPH	Liters/hr	mL/cc per minute	mL/cc per stroke	Maximum Pressure: PSI	Bar
C11, C71, C91	2.3	8.7	145.1	1.45	150 psi	10.3
C12, C72, C92	3.8	14.4	239.8	2.40	100 psi	6.9
C13, C73, C93	7.8	29.5	492.2	4.92	60 psi	4.1

AutoPrime™ liquid ends have 3 check valves: suction on the bottom; discharge on the front; and autoprime bleed on the top. By design, a repeatable portion of the process fluid continuously bleeds through the top check valve to be returned to the chemical supply. The result is the assurance that any gas in the head is automatically relieved thus eliminating air-binding. The maximum output per the tables above is reduced to account for the continuous bleed.

■ See front page for voltage code specifications.
Plastic heads with tubing connection include ½" NPT and ½" BSP.
**These Liquid Ends are available without a 4FV, simply drop the 'S' at the end of the Liquid End number to order the model without a 4FV.
#These liquid ends use 3/8" diameter balls. Pump output may be reduced in some applications.

† To specify ¼" NPT male, change 'I' to 'P'.
To specify black, UV resistant tubing, change 'I' to 'U'.
To specify 3FV, change 'S' to 'T'.

3FV indicates that the pump is equipped with an LMI Three Function Valve (pressure relief, priming aid, line drain).

4FV indicates that the pump is equipped with an LMI Four Function Valve. This diaphragm type, anti-syphon/pressure relief valve is installed on the pump head. It provides anti-syphon protection and aids priming, even under pressure.

Fluorofilm™ is a copolymer of PTFE and PFA.
Polyprel® is an elastomeric PTFE copolymer.

ProSeries-M®

by Blue-White Ind.

ProSeries-M® Peristaltic Metering Pumps

Engineering and Technical Data

FLEX-PRO® M-2

Feed Rates to 14.9 GPH (56.2 LPH)
Pressures to 125 PSI
4-20mA, Pulse Input and Manual Speed Control
Optional Modbus, Profibus, Industrial Ethernet
200:1 Turndown ratio
Tube Failure Detection System
Tube life hour counter
Variable Speed DC Motor
NEMA 4X (IP 66) Washdown Duty
NSF Listed Std. 61
5 Year Warranty

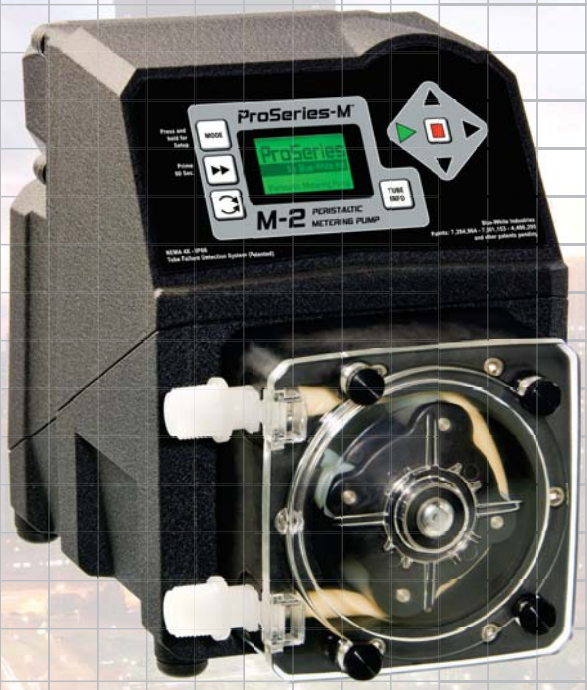

Sold and serviced exclusively by highly skilled, factory authorized technicians.

TFD system Tube Failure Detection NSF CE NEMA 4X

Patents: 4,496,295 7,001,153 and other patents pending

Applications:

- Municipal Water Treatment
- Municipal Wastewater Treatment
- Chemical Metering
- Chlorination
- Chloramination
- Fluoridation
- Polymer Injection
- Acid Injection
- Alum Injection
- PAC Injection
- Caustic Injection

Features:

- Peristaltic pump design does not have valves that can clog requiring maintenance.
- Self priming - even against maximum line pressure. By-pass valves are not required. Cannot vapor lock, or lose prime. Does not permit syphoning.
- Output rates to: 14.9 GPH (56.2 LPH) and pressures to 125 PSI (8.6 Bar).
- Variable speed DC motor.
- Specially engineered tubing for long life at high pressures. Meets FDA 21 CFR requirements for food contact applications.
- Patented Tube Failure Detection (TFD) system. Senses tube failure by detecting chemical in the pump head. No false triggering.
- 200:1 turndown ratio.
- Inputs: 4-20mA and pulse inputs for remote external speed control and either powered 6-24 VDC or non-powered dry contact closure for remote start/stop. Optional communications availble: Profibus DPV1, Modbus RTU, Modbus-TCP, EtherNet/IP, and Profinet RT I/O.
- Backlit LCD displays motor speed, input signal values, tube life timer, service and alarm status.
- Outputs: one 250V/6A relay to monitor TFD (Tube Failure System) and FVS (Flow Verification System), and 4-20mA analog signal scalable to the motor speed.
- Two CNC precision machined squeeze rollers and two alignment rollers for optimum squeeze, unparalleled accuracy, and tube life.
- Heavy duty rotor - single piece plastic rotor means no flexing and increased accuracy with no metal springs or hinges to corrode.
- Inject at maximum pressure in either direction (clockwise and counter clockwise).
- Compatible with Blue-White's output Flow Verification Sensor (FVS) system. Sensor is sold separately.

Engineering Specifications:

Maximum working pressure (excluding pump tubes):
125 psig (8.6 bar)
Note: see individual pump tube assembly maximum pressure ratings.

Maximum Fluid temperature (excluding pump tubes):
3/8" OD x 1/4" ID tubing connections: 130° F (54° C)
M/NPT connections: 185° F (85° C)
Note: see individual pump tube assembly maximum temperature ratings.

Maximum fluid viscosity:
12,000 Centipoise

Maximum suction lift:
30 ft. of water at sea level (14.7 atm psi)

Ambient Operating Temperature
14°F to 115°F (-10°C to 46°C)

Ambient Storage Temperature
-40°F to 158°F (-40°C to 70°C)

Operating Voltage:
115VAC/60Hz, 1ph (1.5 Amp Maximum)
230VAC/60Hz, 1ph (0.7 Amp Maximum)
220VAC/50Hz, 1ph (1.0 Amp Maximum)
240VAC/50Hz, 1ph (1.0 Amp Maximum)

Power Cord Options:
115V60Hz = NEMA 5/15 (USA)
230V60Hz = NEMA 6/15 (USA)
220V50Hz = CEE 7/VII (EU)
240V50Hz = AS 3112 (Australia/New Zealand)

Motor:
Brushed DC, 1/8 H.P.

Duty cycle:
Continuous

Motor speed adjustment range 200:1:
0.5% - 100% motor speed (0.7 to 130 RPM)

Motor speed adjustment resolution:
0.1% increments

Display
Backlit LCD, UV resistant.

Keypad
Eight button positive action tactile switch keypad.

Enclosure:
NEMA 4X (IP66), Polyester powder coated aluminum.
Maximum Overall Dimensions:
7-1/2" W x 10-1/4" H x 14" D (19 W x 26 H x 35.6 D cm)

Product weight:
28.4lb. (12.9 Kg)

Approximate shipping wt:
35 lb. (15.9 Kg)

Materials of Construction:

Wetted components:

Pump Tube Assembly (Model Specific - 2 provided):
Tubing: . . . . . Norprene® or Norprene® Chemical or Tygothane®
Adapter fittings: .PVDF

Recommended Ancillary Items Sold Separately:

Injection / Back-flow Check valve:
Body & insert: . . . . . PVDF
Check Ball: . . . . . Ceramic
Spring: . . . . . Hastelloy C-276
Ball Seat O-ring: . . . . . FKM (optional EP)
Static Seal O-ring: . . . . FKM (optional EP)
Duckbill anti-scale valve: Santoprene®

For "S" tubing type connections only:
Suction Tubing: . . . . . 3/8" OD x 1/4" ID x 10' Clear PVC
Discharge Tubing: . . . . 3/8" OD x 1/4" ID x 10' Polyethylene (LLDPE)
Suction Strainer: . . . . . Polypropylene

For "M" M/NPT connections only:
Suction Strainer:
Body: . . . . . PVDF
Check Ball: . . . . . Ceramic
Ball Seat O-ring: . . . . . FKM (optional EP)

For "C" Tri-clamp and "Q" Quick Disconnect connections only:
(Available for Flex-A-Prene® only)
Suction Strainer: . . . . . Polypropylene

Non-Wetted components:

Enclosure:
413 Aluminum (Polyester powder coated)

Pump Head:
Valox® (PBT) thermoplastic

Pump Head Cover:
Polycarbonate for added strength and chemical resistance.
Permanently lubricated sealed motor shaft support ball bearing.

Cover Screws:
Stainless Steel

Roller Assembly:
Rotor:.....Valox® (PBT)
Rollers: .....Nylon
Roller Bearings: .....SS Ball Bearings
Roller Shaft:.....316 Stainless Steel

Motor Shaft:
Chrome plated steel

TFD System Sensor pins:
Hastelloy C-276

Power Cord:
3 conductor, SJTW-A Water-resistant

Tube Installation Tool:
Glass Filled Nylon

Mounting Brackets and Hardware:
316 Stainless Steel

Output Specifications:

Feed Rate			Max Speed	Max Pressure	Max Temperature	M-2 Model Numbers		
Norprene® M-2 Tube Pumps								
Meets FDA criteria for food | Excellent chemical resistance | CIP | SIP								
GPH	**LPH**	**ML/Min**	**RPM**	**PSI (bar)**	**F (C)**	**115V AC**	**230V AC**	**220V AC**
.01 - 1.7	.03 - 6.5	1 - 108	130	125 (8.6)	185 (85)	M-224-*ND	M-225-*ND	M-226-*ND
Flex-A-Prene® M-2 Tube Pumps								
Meets FDA criteria for food | Excellent chemical resistance | CIP | SIP								
GPH	**LPH**	**ML/Min**	**RPM**	**PSI (bar)**	**F(C)**	**115V AC**	**230V AC**	**220V AC**
.02 - 4.5	.09 - 16.9	1.4 - 280	130	110 (7.6)	185 (85)	M-224-*NEE	M-225-*NEE	M-226-*NEE
.09 - 17.2	.33 - 65.1	5.4 - 1085	130	110 (7.6)	185 (85)	M-224-*NGG	M-225-*NGG	M-226-*NGG
Norprene® Chemical M-2 Tube Pumps								
Meets FDA criteria for food | Superb chemical resistance								
GPH	**LPH**	**ML/Min**	**RPM**	**PSI (bar)**	**F (C)**	**115V AC**	**230V AC**	**220V AC**
.07 - 14.9	.28 - 56.2	5 - 937	130	50 (3.4)	130 (54)	M-224-*TH	M-225-*TH	M-226-*TH
Tygothane® M-2 Tube Pumps								
Meets FDA criteria for food | Resistant to oils, greases and fuels								
GPH	**LPH**	**ML/Min**	**RPM**	**PSI (bar)**	**F (C)**	**115V AC**	**230V AC**	**220V AC**
.02 - 4.0	.08 - 15.2	1 - 253	130	65 (4.5)	130 (54)	M-224-*GE	M-225-*GE	M-226-*GE
.05 - 9.3	.17 - 35.2	3 - 587	130	65 (4.5)	130 (54)	M-224-*GG	M-225-*GG	M-226-*GG

* Inlet/outlet connection type
S = 3/8” OD x 1/4” ID tubing compressions type connections
M = 1/2” male NPT
B = 1/2” Hose barb, Natural PVDF (Kynar), (Flex-A-Prene® model only)
C = 1/2” - 3/4” tri-clamp connections
Q = Quick Disconnect (Flex-A-Prene® model only)

- The Flex-Pro Pump’s motor speed is linear over the entire 0.5% to 100% adjustment range.
- Output versus pressure is nearly linear in all models. Larger tubes exhibit greater losses.
- For optimum tube life, specify the pump to operate at the lowest possible RPM and pressure.

Chemical Resistance of Tubing:

Flex-A-Prene® and Norprene® Tubing

Meets FDA criteria for food | Excellent chemical resistance | CIP | SIP

Alcohol general	Ethylene glycol	Hydrochloric acid 33%	Potassium hydroxide
Aluminum Sulfate (Alum)	Ferric chloride	Hydrocyanic acid	Potassium permanganate
Ammonium chloride	Ferric nitrate	Hydrogen peroxide	Propylene glycol
Ammonium hydroxide	Ferric sulfate	Hypochlorous acid	Sodium hydroxide 50%
Ammonium Sulfate (LAS)	Ferrous chloride - 43% in water	Iodine	Sodium Bisulfite
Benzyl alcohol	Ferrous sulfate	Magnesium chloride	Sodium Hypochlorite 12.5%
Bleach	Fluosilicic Acid (up to 25%)	Magnesium sulfate	Sodium sulfide
Brine solutions	Formic acid	Phosphoric acid	Sulfuric acid up to 50%
Calcium hypochlorite 20%	Glucose	Plating solutions	Tannic acid

Norprene® Chemical Tubing - Ultra smooth plasticizer-free bore (inner liner)

Meets FDA criteria for food | Superb chemical resistance

Ferrous Chloride (up to 40%)	Phosphoric Acid (up to 85%)	Bases	Applications:
Fluoboric Acid (up to 48%)	Potassium Hypochlorite (up to 70%)	Salts	Ink and solvent production
Fluosilicic Acid (up to 25%)	Sodium Phosphate (up to 30%)	Ketones	Battery acid filling
Hydrofluoric Acid (up to 48%)	Sulfuric Acid (up to 98%)	Alcohols	Specialty chemical production / processing
Nitric Acid (up to 71%)		Isobutyl Alcohol	Sensitive fluid transfer

Tygothane® Tubing

Meets FDA criteria for food | Resistant to oils, greases and fuels

Cyclohexane	Kerosene	Oils:	Oils:
Diesel Fuel	Lard	ASTM reference No.1,2,3	Linseed
Fatty acids	Mineral spirits	Castor	Lubricating
Gasoline	Soap solutions	Coconut	Mineral
Heptane	Turpentine	Fuel	
Hexane	Polymers		

Norprene® is a registered trademark of Saint-Gobain.
Tygothane® is a registered trademark of Saint-Gobain.
Note: Data shown at 72 degrees F.

Engineering and Technical Data

Dimensions:

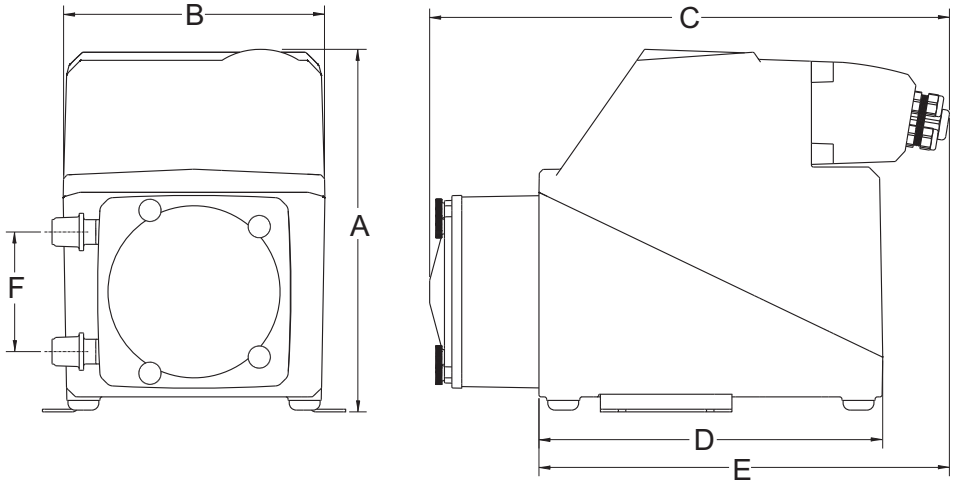

Dim	M-2 Series Inches	M-2 Series cm
A	10-1/4”	26
B	7-1/2”	19
C	14”	35.6
D	9-1/2”	24.1
E	11”	27.9
F	3-3/8”	8.6

Model Number Matrix:

M	**Flex-Pro ProSeries-M Model Number**
	Maximum Output Range
2	Flex-Pro M-2
	Maximum Motor Speed
2	130 RPM (maximum rotor rotation speed)
	Power Cord (operating voltage user selectable 115V/240 Vac 50/60Hz)
4	115V / 60Hz, power cord NEMA 5/15 plug (US)
5	230V / 60Hz, power cord NEMA 6/15 plug (US)
6	220V / 50HZ, power cord CEE 7/VII plug (EU)
8	240V / 50HZ, power cord AS 3112 plug (Australia/New zealand)
X	No Power Cord
	Inlet/Outlet Connection Size, Connection Type, Connection Material
S	3/8” OD x 1/4” ID Tube Compression Fitting, Natural PVDF (Kynar)
M	1/2” Male NPT Fitting, Natural PVDF (Kynar)
B	1/2” Hose Barb, Natural PVDF (Kynar), **Flex-A-Prene® only**
C	1/2” - 3/4” Tri-clamp connections, Natural PVDF (Kynar), **Flex-A-Prene® only**
Q	Quick Disconnect, Natural PVDF (Kynar), **Flex-A-Prene® only**

Pump Tube Material, Pump Tube Size, Output Range			
ND	Norprene® .078 ID, 0.01 to 1.7 GPH	**GE**	Tygothane® .125 ID, 0.02 to 4.0 GPH
NEE	Flex-A-Prene® .093 ID, 0.02 to 4.5 GPH	**GG**	Tygothane® .187 ID, 0.05 to 9.3 GPH
NGG	Flex-A-Prene® .187 ID, 0.09 to 17.2 GPH	**TH**	Norprene® Chemical .250 ID, 0.08 to 14.9 GPH

	Options (leave this blank for standard model with left facing pump head inlet/outlet)
R	Right facing pump head, input / output (Left facing fluid input / output is standard)
D	Down facing pump head, input / output (Left facing fluid input / output is standard)
C1	Communications Interface - Profibus DPV1
C2	Communications Interface - Modbus RTU
C3	Communications Interface - Modbus TCP
C4	Communications Interface - Industrial EtherNet/IP
C5	Communications Interface - Profinet RT I/O

M	-	2	2	4	-	S	N H	-	R-C4	Sample Model Number

Features list:

Features:
TFD (Tube Failure Detection) System Alarm
FVS (Flow Verification System) Alarm *
Motor reverse (rotor reversible)
Three position pump head rotation
Output: One, 6 amp alarm relay
Output: Analog 4-20mA
Input: One, dry contact closure 6-24 Vdc powered loop for remote start / stop
Input: Remote speed control via 4-20mA, 0-10VDC, high speed digital pulse, contact closure pulse
Optional: remote communications, Profibus DPV1, Modbus RTU, Modbus-TCP, EtherNet/IP, and Profinet RT I/O.
Display: Motor speed, Input signal values, Tube life timer, Tube Failure Detection (TFD) system and Flow Verification System (FVS) alarm status

Available Operating Modes:
Manual (local): speed adjustment
Remote input: 4-20mA
Remote input: high speed frequency (pulse) input
Remote input: pulse triggered batch dispensing

Optional Communications Commands List

Control Commands	Available Pump Status Data
Start/Stop	Motor run/stop status
Set motor speed (0.5 to 100.0%)	Priming status
60 second prime at maximum speed	Pump head Cover on/off status
Lock and unlock any touch pad button	Status of each local touch pad button
Clear/reset general alarm	Motor direction
Reset pump tube timer	Current operating mode selection
Set operating mode	TFD (Tube Failure Detection) system status
	FVS (Flow Verification System) status
	General alarm status
	Alarm output relay status
	Current pump operating speed
	Current pump tube timer accumulated hours
	Current analog input signal value in mA
	Current frequency input signal value in Hz
	Current analog output signal value in mA
	Pump model and software version

* Requires Micro-Flo Sensor sold separately

Factory Authorized Representative:

ProSeries-M® by Blue-White Ind.
5300 Business Drive, Huntington Beach, CA 92649
Tel: 714-893-8529 **Fax:** 714-894-9492
www.ProSeries-M.com **Email:** sales@blue-white.com

ProSeries®

by Blue-White Ind.

ProSeries-M® Peristaltic Metering Pump

Engineering and Technical Data

FLEX-PRO® M-3 & M-4

10,000:1 Turndown ratio
Tube Failure Detection
Revolution Count Display & Alarm
Brushless DC Motor
NEMA 4X (IP 66) Washdown
NSF Listed Std. 61
5 Year Warranty

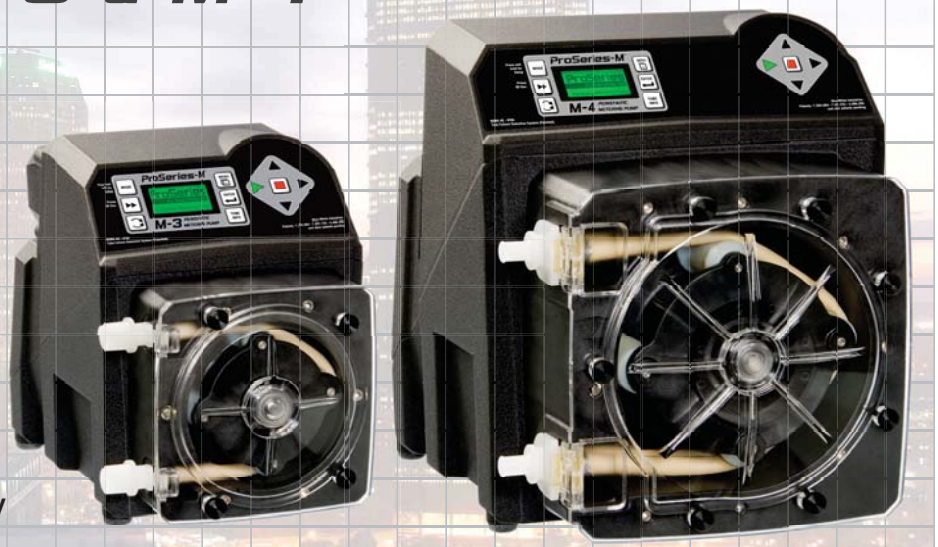

Model M-324-MNK

Model M-424-BNL

Sold and serviced exclusively by highly skilled, factory authorized technicians.

TFD system Tube Failure Detection Patent No. 7,001,152 NSF CE ETL US NEMA 4X

Patents: 4,496,295, 7,001,153, 8,418,364 and other patents pending

Applications:

- Municipal Water Treatment
- Municipal Wastewater Treatment
- Chemical Metering
- Chlorination
- Chloramination
- Fluoridation
- Polymer Injection
- Acid Injection
- Alum Injection
- PAC Injection
- Caustic Injection

Features:

- Peristaltic pump design does not have valves that can clog requiring maintenance.
- Self priming - even against maximum line pressure. By-pass valves are not required. Cannot vapor lock or lose prime.
- Output rates to: 158.5 GPH (600 LPH) and pressures to 125 PSI (8.6 Bar).
- 10,000:1 turndown ratio with high resolution motor speed adjustment.
- No maintenance brushless variable speed motor.
- Specially engineered tubing for long life at high pressures.
- Patented Tube Failure Detection (TFD) system. Senses tube failure by detecting chemical in the pump head. No false triggering from condensation or washdown.
- Control Inputs include: 4-20mA, 0-10Vdc, and Pulse inputs for remote external speed or batch control and 0-30 VDC / contact closure remote start/stop.
- Revolution count display with user programmable alarm set-point for tube maintenance.
- VGA Graphic multi-color backlit LCD displays remote/local control status, motor speed, output rate, input signal values, service and alarm status in three easy to see colors.
- Outputs include: Scalable 4-20mA or pulse, one 250V/6A relay and three 115V/1A contact closures assignable to monitor various pump functions including TFD, FVS, revolution counter, remote/local, forward/reverse, input signals, output signals, motor on, motor fault, operating mode setting, and others.
- Two CNC precision machined squeeze rollers and two alignment rollers provide factory calibrated optimum squeeze for unparalleled accuracy and extra long tube life.
- Heavy duty rotor - single piece plastic rotor means no flexing and increased accuracy with no metal springs or hinges to corrode.
- Inject at maximum pressure in either direction (clockwise or counter clockwise).
- Compatible with Blue-White's output Flow Verification Sensor (FVS) system.

Engineering Specifications:

Maximum working pressure (excluding pump tubes):
125 psig (8.6 bar)
Note: see individual pump tube assembly maximum pressure ratings.

Maximum Fluid temperature (excluding pump tubes):
3/8" OD x 1/4" ID tubing connections: 130°F (54°C)
M/NPT connections: 185°F (85°C)
Note: see individual pump tube assembly maximum temperature ratings.

Ambient Operating Temperature
14°F to 115°F (-10°C to 46°C)

Ambient Storage Temperature
-40°F to 158°F (-40°C to 70°C)

Operating Voltage:
M-3 MODELS: 96 to 264VAC-50/60Hz, 220 VA
M-4 MODELS: 96 to 264VAC-50/60Hz, 350 VA

Power Cord Options:
115V60Hz = NEMA 5/15 (USA)
230V60Hz = NEMA 6/15 (USA)
220V50Hz = CEE 7/VII (EU)
240V50Hz = AS 3112 (Australia/New Zealand)

Enclosure:
NEMA 4X (IP66), Polyester powder coated aluminum.
Maximum Overall Dimensions:
M-3 models: 8-1/8"W x 10-3/4"H x 15-1/4"D (20.6W x 27.3H x 38.9D cm)
M-4 models: 12-1/8"W x 14-1/4"H x 18-5/8"D (30.8W x 36.1H x 47.3D cm)

Approximate shipping wt:
M-3 models: 33 lb. (15.0 Kg)
M-4 models: 58 lb. (26.3 Kg)

Motor:
Brushless DC, 1/4 H.P.

Motor speed adjustment range
10,000:1 (0.001% - 100% motor speed)

Motor speed adjustment resolution
0.1% increments > 10% motor speed
0.01% increments > 1% motor speed and < 10%
0.001% increments < 1% motor speed

Maximum viscosity
12,000 Centipoise

Maximum suction lift:
30 ft. Water, 0 psig (4.5 m, 0 bar)

Display
3 color VGA backlit LCD, UV resistant.

Display resolution
0.0 > 10% motor speed
0.00 > 1% motor speed and < 10%
0.000 < 1% motor speed

Display languages
English, Spanish, French or German selectable.

Keypad
Eleven button positive action tactile switch keypad.

Security
Programmable 4-digit password.

Materials of Construction:

Wetted components:

Pump Tube Assembly (Model Specific - 2 provided):
Tubing: . . . . . Flex-A-Prene®, Flex-A-Chem®, or Flex-A-Thane®
Adapter fittings: .PVDF

Recommended Ancillary Items Sold Separately:

Injection / Back-flow Check valve:
Body & insert: . . . . . PVDF
Check Ball: . . . . . Ceramic
Spring: . . . . . Hastelloy C-276
Ball Seat O-ring: . . . . . TFE/P (optional EP)
Static Seal O-ring: . . . . TFE/P (optional EP)

For "S" tubing type connections only:
(Available on M3 only)
Suction Tubing: . . . . . 3/8" OD x 1/4" ID x 10' Clear PVC
Discharge Tubing: . . . . 3/8" OD x 1/4" ID x 10' Polyethylene (LLDPE)
Suction Strainer: . . . . . PVDF

For "B" barb tubing and "M" M/NPT connections only:
(Available on ND, NKL, NK, NGG, NEE and M-4 only)
Suction Strainer:
Body: . . . . . PVDF
Check Ball: . . . . . Ceramic
Ball Seat O-ring: . . . . . TFE/P (optional EP)

For "C" Tri-clamp and "Q" Quick Disconnect connections* only:
(Available on ND, NKL, NK, NGG, and NEE only)
Suction Strainer: . . . . . PVDF

***Quick Disconnect Valves sold separately**

Non-Wetted components:

Enclosure:
413 Aluminum (Polyester powder coated)

Pump Head:
Valox® (PBT) thermoplastic

Pump Head Cover:
Polycarbonate for added strength and chemical resistance.
Permanently lubricated sealed motor shaft support ball bearing.

Cover Screws:
Stainless Steel

Roller Assembly:
Rotor:.....Valox® (PBT)
Rollers:.....Nylon
Roller Bearings:.....SS Ball Bearings

Motor Shaft:
Chrome plated steel

TFD System Sensor pins:
Hastelloy C-276

Power Cord:
3 conductor, SJTW-A Water-resistant

Tube Installation Tool:
Glass Filled Nylon

Mounting Brackets and Hardware:
316 Stainless Steel

Output Specifications:

Output Range			Max Speed	Max Pressure	Max Temperature	M-3 Model Numbers		
Flex-A-Prene® M-3 Tube Pumps								
Listed under NSF Std. 61 | Meets FDA criteria for food | Excellent chemical resistance | CIP | SIP								
GPH	**LPH**	**ML/MIN**	**RPM**	**PSI (bar)**	**F (C)**	**115V AC**	**230V AC**	**220V AC**
.0002 - 2.10	.0007 - 7.92	.0132 - 132	125	125 (8.6)	185 (85)	M-324-*ND	M-325-*ND	M-326-*ND
.0025 - 25.3	.0096 - 96.0	.1596 - 1596	125	125 (8.6)	185 (85)	M-324-*NJ	M-325-*NJ	M-326-*NJ
.0033 - 33.3	.0126 - 126	.2100 - 2100	125	125 (8.6)	185 (85)	M-324-*NK	M-325-*NK	M-326-*NK
.0033 - 33.3	.0126 - 126	.2100 - 2100	125	30 (2.1)	185 (85)	M-324-*NKL	M-325-*NKL	M-326-*NKL
Flex-A-Prene® M-3 Tube Pumps								
Listed under NSF Std. 61 | Meets FDA criteria for food | Excellent chemical resistance | Extra long life at low pressures								
GPH	**LPH**	**ML/MIN**	**RPM**	**PSI (bar)**	**F (C)**	**115V AC**	**230V AC**	**220V AC**
.0005 - 4.8	.0018 - 18.0	.03 - 300	125	110 (7.6)	185 (85)	M-324-*NEE	M-325-*NEE	M-326-*NEE
.0019 - 19.0	.0072 - 72.0	.12 - 1200	125	110 (7.6)	185 (85)	M-324-*NGG	M-325-*NGG	M-326-*NGG
Flex-A-Chem® M-3 Tube Pumps								
Listed under NSF Std. 61 | Meets FDA criteria for food | Superior chemical resistance								
GPH	**LPH**	**ML/MIN**	**RPM**	**PSI (bar)**	**F (C)**	**115V AC**	**230V AC**	**220V AC**
.0014 - 14.5	.0055 - 55.1	.0920 - 920	125	50 (3.4)	130 (54)	M-324-*TH	M-325-*TH	M-326-*TH
.0028 - 28.5	.0108 - 108	.1800 - 1800	125	50 (3.4)	130 (54)	M-324-*TK	M-325-*TK	M-326-*TK
Flex-A-Thane® M-3 Tube Pumps								
Meets FDA criteria for food | Resistant to oils, greases and fuels								
GPH	**LPH**	**ML/MIN**	**RPM**	**PSI (bar)**	**F (C)**	**115V AC**	**230V AC**	**220V AC**
.0004 - 4.60	.0017 - 17.4	.0290 - 290	125	65 (4.5)	130 (54)	M-324-*GE	M-325-*GE	M-326-*GE
.0010 - 10.1	.0038 - 38.4	.0637 - 637	125	65 (4.5)	130 (54)	M-324-*GG	M-325-*GG	M-326-*GG
.0024 - 24.9	.0094 - 94.2	.1570 - 1570	125	65 (4.5)	130 (54)	M-324-*GH	M-325-*GH	M-326-*GH
.0028 - 28.5	.0108 - 108	.1800 - 1800	125	65 (4.5)	130 (54)	M-324-*GK	M-325-*GK	M-326-*GK

Flex-A-Prene

Output Range			Max Speed	Max Pressure	Max Temperature	M-4 Model Numbers		
Flex-A-Prene® M-4 Tube Pumps								
Listed under NSF Std. 61 | Meets FDA criteria for food | Excellent chemical resistance | CIP | SIP								
GPH	**LPH**	**ML/MIN**	**RPM**	**PSI (bar)**	**F (C)**	**115V AC**	**230V AC**	**220V AC**
.0028 - 28.5	.0108 - 108	.180 - 1800	125	125 (8.6)	185 (85)	M-424-*NH	M-425-*NH	M-426-*NH
.0044 - 44.4	.0168 - 168	.280 - 2800	125	100 (6.9)	185 (85)	M-424-*NJ	M-425-*NJ	M-426-*NJ
.0050 - 50.7	.0192 - 192	.320 - 3200	125	80 (5.5)	185 (85)	M-424-*NK	M-425-*NK	M-426-*NK
.0054 - 54.0	.0204 - 204	.340 - 3400	125	100 (6.9)	185 (85)	M-424-*NHH	M-425-*NHH	M-426-*NHH
.010 - 100.0	.0378 - 378	.630 - 6300	125	50 (3.4)	185 (85)	M-424-*NL	M-425-*NL	M-426-*NL
.015 - 158.5	.0600 - 600	1.00 - 10000	125	30 (2.0)	185 (85)	M-424-*NP	M-425-*NP	M-426-*NP
Flex-A-Prene® M-4 Low Pressure Tube Pumps								
Listed under NSF Std. 61 | Meets FDA criteria for food | Excellent chemical resistance | Extra long life at low pressures								
GPH	**LPH**	**ML/MIN**	**RPM**	**PSI (bar)**	**F (C)**	**115V AC**	**230V AC**	**220V AC**
.0050 - 50.7	.0192 - 192	.320 - 3200	125	30 (2.1)	185 (85)	M-424-*NKL	M-425-*NKL	M-426-*NKL
.011 - 111.0	.0420 - 420	.700 - 7000	125	30 (2.1)	185 (85)	M-424-*NKKL	M-425-*NKKL	M-426-*NKKL
Flex-A-Chem® M-4 Tube Pumps								
Listed under NSF Std. 61 | Meets FDA criteria for food | Superior chemical resistance								
GPH	**LPH**	**ML/MIN**	**RPM**	**PSI (bar)**	**F (C)**	**115V AC**	**230V AC**	**220V AC**
.0020 - 20.6	.0078 - 78.0	.130 - 1300	125	30 (2.1)	130 (54)	M-424-*TH	M-425-*TH	M-426-*TH
.0042 - 42.8	.0162 - 162	.270 - 2700	125	30 (2.1)	130 (54)	M-424-*TK	M-425-*TK	M-426-*TK
.0050 - 50.7	.0192 - 192	.320 - 3200	125	30 (2.1)	130 (54)	M-424-*THH	M-425-*THH	M-426-*THH
Flex-A-Thane® M-4 Tube Pumps								
Meets FDA criteria for food | Resistant to oils, greases and fuels								
GPH	**LPH**	**ML/MIN**	**RPM**	**PSI (bar)**	**F (C)**	**115V AC**	**230V AC**	**220V AC**
.0039 - 39.6	.0150 - 150	.250 - 2500	125	65 (4.5)	130 (54)	M-424-*GH	M-425-*GH	M-426-*GH
.0055 - 55.5	.0210 - 210	.350 - 3500	125	65 (4.5)	130 (54)	M-424-*GK	M-425-*GK	M-426-*GK
.010 - 100.0	.0378 - 378	.630 - 6300	125	65 (4.5)	130 (54)	M-424-*GKK	M-425-*GKK	M-426-*GKK

* Inlet/outlet connection types available: **S** = 3/8" OD x 1/4" ID flexible tubing with compression type connections (M-3 models only), **M** = 1/2"male NPT, **B** = 1/2" ID tubing barb type connections (ND, NK, NKL, NEE, NGG and M-4 models only), **C** = 3/4" tri-clamp connections (ND, NK, NKL, NEE, and NGG only), **Q** = Quick Disconnect (ND, NK, NKL, NEE, and NGG only) **(Valves sold separately)** Note: output volumes based on testing with water at 72 degrees F, 5 foot suction lift, atmospheric conditions at sea level.

Chemical Resistance of Tubing:

Flex-A-Prene® Tubing

Meets FDA criteria for food | Excellent chemical resistance

Alcohol general	Citric Acid 50%	Hydrochloric acid 33%	Potassium hydroxide
Aluminum Sulfate (Alum)	Ethylene glycol	Hydrocyanic acid	Potassium permanganate 40%
Ammonium chloride	Ferric chloride	Hydrogen peroxide	Propylene glycol
Ammonium hydroxide	Ferric nitrate	Hypochlorous acid	Sodium hydroxide 50%
Ammonium Sulfate (LAS)	Ferric sulfate	Iodine	Sodium Bisulfite
Benzyl alcohol	Ferrous chloride - 43% in water	Magnesium chloride	Sodium Chlorite 12%
Bleach	Ferrous sulfate	Magnesium sulfate	Sodium Hypochlorite 12.5%
Brine solutions	Fluosilicic Acid (up to 25%)	Phosphoric acid	Sodium sulfide
Calcium Hydroxide 10% (Lime Slurry)	Formic acid	Plating solutions	Sulfuric acid up to 50%
Calcium hypochlorite 20%	Glucose	Polyaluminum Chloride (PAC)	Tannic acid

Flex-A-Chem® - Ultra smooth plasticizer-free bore (inner liner)

Meets FDA criteria for food | Superior chemical resistance

Ferrous Chloride (up to 40%)	Phosphoric Acid (up to 85%)	Bases	Applications:
Fluoboric Acid (up to 48%)	Potassium Hypochlorite (up to 70%)	Salts	Ink and solvent production
Fluosilicic Acid (up to 25%)	Sodium Phosphate (up to 30%)	Ketones	Battery acid filling
Hydrofluoric Acid (up to 48%)	Sulfuric Acid (up to 98%)	Alcohols	Specialty chemical production / processing
Nitric Acid (up to 71%)		Isobutyl Alcohol	Sensitive fluid transfer

Flex-A-Thane® Tubing

Meets FDA criteria for food | Resistant to oils, greases and fuels

Cyclohexane	Kerosene	Oils:	Oils:
Diesel Fuel	Lard	ASTM reference No.1,2,3	Linseed
Fatty acids	Mineral spirits	Castor	Lubricating
Gasoline	Soap solutions	Coconut	Mineral
Heptane	Turpentine	Fuel	
Hexane			

Pump Tube Assembly Output Specifications:

Model M-3 - Available Pump Tubes and Output Ranges

Tube Material	Tube Size	Max Output Pressure	Max Temp	Required Roller Part Number	Output Range		
Material	Code	PSI (bar)	F (C)		GPH	LPH	ML/Min
Flex-A-Prene	ND	125 (8.6)	185 (85)	A3-SND-R	.0002 - 2.10	.0007 - 7.92	.0132 - 132
Flex-A-Prene	NEE	110 (7.6)	185 (85)	A3-SNEE-R	.0005 - 4.8	.0018 - 18.0	.03 - 300
Flex-A-Prene	NGG	110 (7.6)	185 (85)	A3-SNGG-R	.0019 - 19.0	.0072 - 72.0	.12 - 1200
Flex-A-Prene	NJ	125 (8.6)	185 (85)	A3-SNH-R	.0025 - 25.3	.0096 - 96.0	.1596 - 1596
Flex-A-Prene	NK	125 (8.6)	185 (85)	A3-SNH-R	.0033 - 33.3	.0126 - 126	.2100 - 2100
Flex-A-Prene	NKL	30 (2.1)	185 (85)	A3-SNH-R	.0033 - 33.3	.0126 - 126	.2100 - 2100
Flex-A-Chem	TH	50 (3.4)	130 (54)	A3-STH-R	.0014 - 14.5	.0055 - 55.1	.0920 - 920
Flex-A-Chem	TK	50 (3.4)	130 (54)	A3-STH-R	.0028 - 28.5	.0108 - 108	.1800 - 1800
Flex-A-Thane	GE	65 (4.5)	130 (54)	A3-SGE-R	.0004 - 4.60	.0017 - 17.4	.0290 - 290
Flex-A-Thane	GG	65 (4.5)	130 (54)	A3-SGE-R	.0010 - 10.1	.0038 - 38.4	.0637 - 637
Flex-A-Thane	GH	65 (4.5)	130 (54)	A3-SGE-R	.0024 - 24.9	.0094 - 94.2	.1570 - 1570
Flex-A-Thane	GK	65 (4.5)	130 (54)	A3-SGE-R	.0028 - 28.5	.0108 - 108	.1800 - 1800

Model M-4 - Available Pump Tubes and Output Ranges

Tube Material	Tube Size	Max Output Pressure	Max Temp	Required Roller Part Number	Output Range		
Material	Code	PSI (bar)	F (C)		GPH	LPH	ML/Min
Flex-A-Prene	NH	125 (8.6)	185 (85)	A4-MNH-R	.0028 - 28.5	.0108 - 108	.1800 - 1800
Flex-A-Prene	NJ	100 (6.9)	185 (85)	A4-MNH-R	.0044 - 44.4	.0168 - 168	.2800 - 2800
Flex-A-Prene	NK	80 (5.5)	185 (85)	A4-MNH-R	.0050 - 50.7	.0192 - 192	.3200 - 3200
Flex-A-Prene	NHH	100 (6.9)	185 (85)	A4-MNH-R	.0054 - 54.0	.0204 - 204	.3400 - 3400
Flex-A-Prene	NL	50 (3.4)	185 (85)	A4-MNL-R	.0100 - 100.0	.0378 - 378	.6300 - 6300
Flex-A-Prene	NP	30 (2.1)	185 (85)	A4-MNL-R	.0158 - 158.5	.0600 - 600	1.00 - 10000
Flex-A-Prene	NKL	30 (2.1)	185 (85)	A4-MNH-R	.0050 - 50.7	.0192 - 192	.3200 - 3200
Flex-A-Prene	NKKL	30 (2.1)	185 (85)	A4-MNH-R	.0111 - 111.0	.0420 - 420	.7000 - 7000
Flex-A-Chem	TH	30 (2.1)	130 (54)	A4-MTH-R	.0020 - 20.6	.0078 - 78.0	.1300 - 1300
Flex-A-Chem	TK	30 (2.1)	130 (54)	A4-MTH-R	.0042 - 42.8	.0162 - 162	.2700 - 2700
Flex-A-Chem	THH	30 (2.1)	130 (54)	A4-MTH-R	.0050 - 50.7	.0192 - 192	.3200 - 3200
Flex-A-Thane	GH	65 (4.5)	130 (54)	A4-MGH-R	.0039 - 39.6	.0150 - 150	.2500 - 2500
Flex-A-Thane	GK	65 (4.5)	130 (54)	A4-MGH-R	.0055 - 55.5	.0210 - 210	.3500 - 3500
Flex-A-Thane	GKK	65 (4.5)	130 (54)	A4-MGH-R	.0100 - 100.0	.0378 - 378	.6300 - 6300

Engineering and Technical Data

Dimensions:

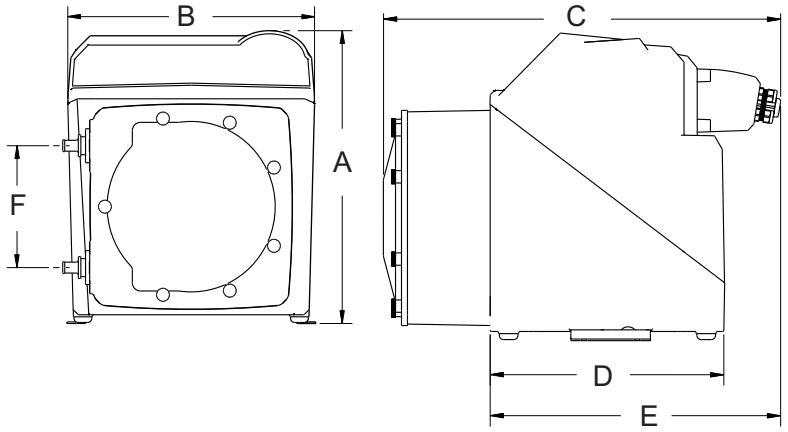

Dim	M-3 Series Inches	M-3 Series cm	M-4 Series Inches	M-4 Series cm
A	10-3/4”	27.3	14-1/4”	36.1
B	8-1/8”	20.6	12-1/8”	30.8
C	15-1/4”	38.9	18-5/8”	47.3
D	10”	25.4	11”	27.9
E	12-1/4”	31.0	13-5/8”	34.6
F	4-1/4”	10.7	6”	15.2

Model Number Matrix:

M	**Flex-Pro® ProSeries-M® Model Number**
	Maximum Output Range
3	Flex-Pro M-3 maximum output 33.3 GPH(126 LPH)
4	Flex-Pro M-4 maximum output 158.5 GPH (600 LPH)
	Maximum Motor Speed
2	125 RPM (maximum rotor rotation speed)
	Power Cord (operating voltage requirement 96VAC to 264VAC)
4	115V / 60Hz, power cord NEMA 5/15 plug (US)
5	230V / 60Hz, power cord NEMA 6/15 plug (US)
6	220V / 50HZ, power cord CEE 7/VII plug (EU)
8	240V / 50HZ, power cord AS 3112 plug (Australia/New zealand)
X	No Power Cord
	Inlet/Outlet Connection Size, Connection Type, Connection Material
S	3/8” OD x 1/4” ID Tube Compression Fitting, Natural PVDF (Kynar), available for M-3 models only
M	½” Male NPT Fitting, Natural PVDF (Kynar), available for M-3 and M-4 models
B	½” ID Tubing Barb Fitting, Natural PVDF (Kynar), available for ND, NK, NKL, NEE, NGG and M-4 models only
C	1/2” - 3/4” Tri-clamp connections, Natural PVDF (Kynar), available for ND, NK, NKL, NEE, and NGG only
Q	Quick Disconnect, Natural PVDF (Kynar), available for ND, NK, NKL, NEE, and NGG only **(Valves sold separately)**

Pump Tube Material, Pump Tube Size

ND	Flex-A-Prene® .075 ID, M-3 models only	THH	Flex-A-Chem® .250 ID (Dual Tube), M-4 models only
NH	Flex-A-Prene® .250 ID - M-4 models only	TK	Flex-A-Chem® .375 ID
NHL	Flex-A-Prene® .250 ID (65 PSI max pressure - longer life) M-4 only	TKK	Flex-A-Chem® .375 ID (Dual Tube), M-4 models only
NHH	Flex-A-Prene® .250 ID (Dual Tube), M-4 models only	GE	Flex-A-Thane® .125 ID, M-3 models only
NJ	Flex-A-Prene®.312 ID	GG	Flex-A-Thane® .187 ID, M-3 models only
NK	Flex-A-Prene® .375 ID	GH	Flex-A-Thane® .250 ID
NKL	Flex-A-Prene® .375 ID (30 PSI max pressure - longer life)	GHH	Flex-A-Thane® .250 ID (Dual Tube), M-4 models only
NKKL	Flex-A-Prene® .375 ID (30 PSI max - Dual Tube), M-4 models only	GK	Flex-A-Thane® .375 ID
NL	Flex-A-Prene® .500 ID, M-4 models only	GKK	Flex-A-Thane®.375 ID (Dual Tube), M-4 models only
NP	Flex-A-Prene® .750 ID, M-4 models only	NEE	Flex-A-Prene® .093 ID (Dual Tube), M-3 models only
TH	Flex-A-Chem® .250 ID	NGG	Flex-A-Prene® .187 ID (Dual Tube), M-3 models only

R	Right facing pump head, input / output (Left facing fluid input / output is standard)
D	Down facing pump head, input / output (Left facing fluid input / output is standard)

M	-	4	2	4	-	M	N H		Sample Model Number

Features list:

Features
TFD (Tube Failure Detection) System Alarm
FVS (Flow Verification System) Alarm - Requires Micro-Flo Sensor (sold separately)
10,000:1 turndown reversible motor.
Three position pump head rotation
Tube Life revolution counter with user programmable alarm set-point.
Set maximum motor RPM limit.
Power interruption re-start options.
Four output contacts can be triggered by the status of the TFD system, FVS system, general alarm, rotor direction, motor run/stop, revolution count, motor fail, remote/local setting, input signal failure, output signal failure, and currently active operating mode.
Output: One, 6 amp alarm relay
Output: Three, dry contact or maximum 30VDC/115VAC 1 amp contact closures
Output: Programmable 4-20mA signal or high speed pulse, proportional to pump output
Input: One, contact closure (remote start / stop)
Input: Remote speed control via 4-20mA, 0-10VDC, high speed digital pulse, contact closure pulse
Remote/Local control settings
Password protection
Display: Motor speed, Tube life revolutions, Tube Failure Detection (TFD) system and Flow Verification System (FVS) alarm status
Display: Output in ml/min, oz/min, L/hr, Gal/hr, Gal/day, RPM, and input signal values
Automated PPM chemical dosing system
Available Operating Modes:
Manual (local): speed adjustment
Remote input: 4-20mA
Remote input: 0-10 VDC
Remote input: high speed frequency (pulse) input
Remote input: pulse triggered batch dispensing
Remote input: proportional PPM (parts per million) dosing with high speed frequency (pulse) input
Manual (local): batch dispensing
Manual (local): repeating cycle timer
Manual (local): fixed speed PPM (parts per million) dosing

Quick-Disconnect Valve Kits (Sold Separately)

For use with the Quick-Disconnect Flex-A-Prene Tube Assembly

⅜" OD, ¼" Tubing		½" Hose Barb		½" M/NPT	
					
Part #	**O-ring**	**Part #**	**O-ring**	**Part #**	**O-ring**
KIT-QSV	FKM	KIT-QBV	FKM	KIT-QMV	FKM
KIT-QSE	EP	KIT-QBE	EP	KIT-QME	EP

Color coded terminal block located within the single piece junction box.

ProSeries-M® by Blue-White Ind.
5300 Business Drive, Huntington Beach, CA 92649
Tel: 714-893-8529 **Fax:** 714-894-9492
www.ProSeries-M.com **Email:** sales@blue-white.com

Patents: 4,496,295, 7,001,153, 8,418,364 and other patents pending

FluoroPro

Ref. Only. Obsolete

Fluoride Saturator Instructions

The NPI FluoroPro saturator is designed to create a saturated solution of Sodium Fluoride (NaF) from dry NaF crystals and potable water. The system is an 'up-flow' in terms of design which indicates that the incoming water is introduced from the bottom of the saturator and then gently works its way through the NaF bed upward toward the liquid level. This system will create a solution strength ranging from 4% to 7% by weight, depending on temperature and other variables.

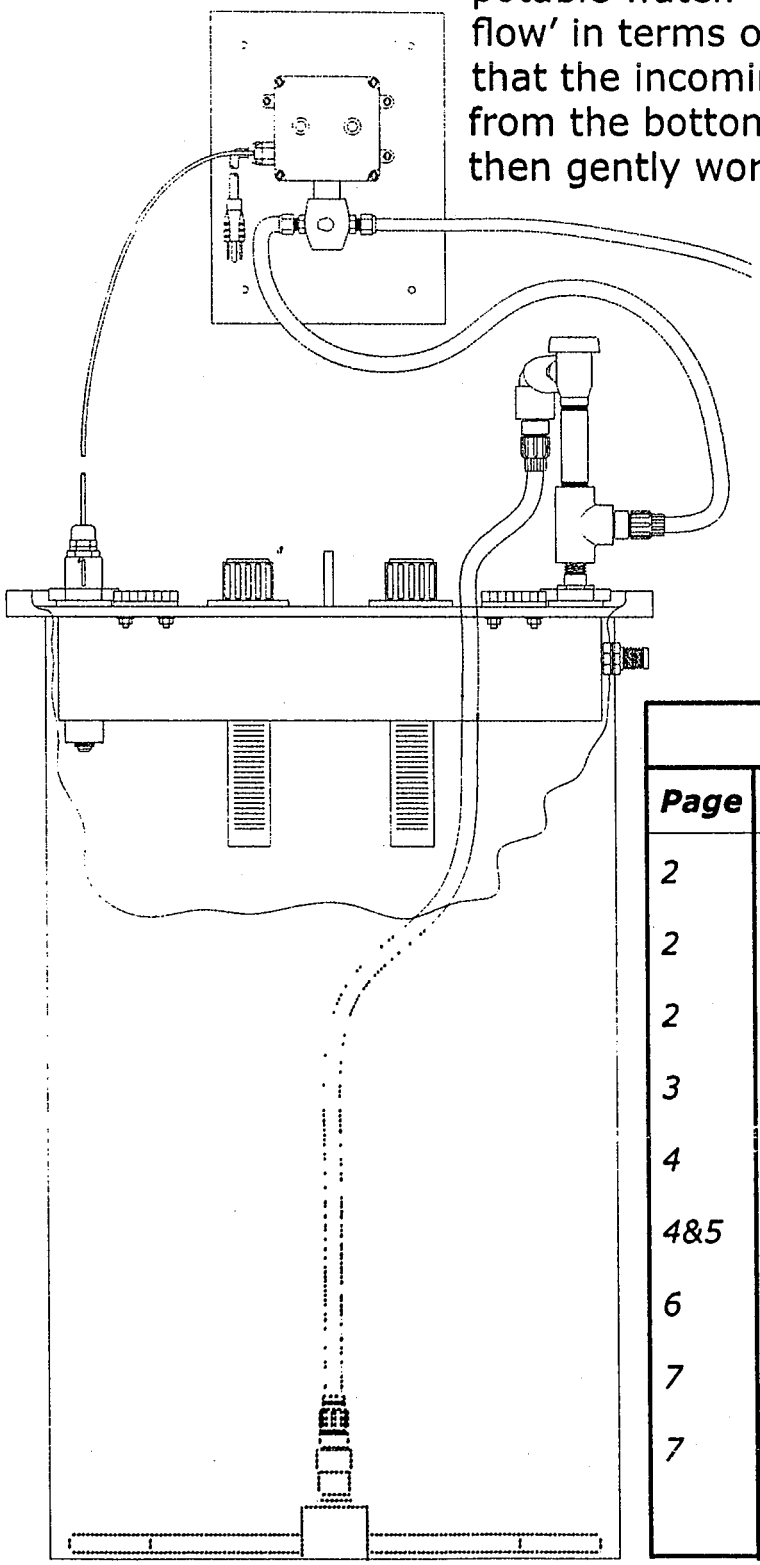

Table of Contents

Water Supply:

The supply of potable water should be equipped with an AWWA approved back-flow preventer (to complement the vacuum breaker installed in your saturator) and a pressure- reducing valve (max output pressure = 80 psig) if your supply pressure exceeds 80 psig. The saturator will require about 2 GPM maximum flow capacity from your supply plumbing. A 1/2" NPT female connection should be provided for supply.

Incoming Water Quality:

Incoming water must be less than 2 grains. This is necessary to avoid precipitation in the saturator which may lead to reduced fluoride effectiveness and increased need for maintenance.

Setup and Installation:

1. Place FluoroPro on a smooth surface (i.e., a floor free of pebbles that could damage the bottom of the tank when fully loaded).
2. Position the gallon indicators (molded in the outer tank wall) and NaF-level labels so that they are clearly visible.
3. Connect the overflow connection to an appropriate point such as a secondary containment tank.
4. Install the two piping subassemblies included with the unit (marked "A" & "B") to the appropriate 1/2" pipe connections in the cover assembly (also marked "A" & "B").
5. Connect the incoming water supply to the installed tubing connector on the saturator using the 3/8" tubing and connector provided.

WARNING:

For proper operation of the mechanical fill valve, the inlet flow rate must be restricted to ***2 GPM or less.***

FAILURE TO RESTRICT FLOW TO 2 GPM OR LESS MAY RESULT IN AN OVERFLOW CONDITION.

USE PROPER SAFETY PRECAUTIONS!
Wear Proper Eye Protection, Dust Mask, Gloves and Other Protective Gear as Specified by Chemical Handling Laws & Standards for NaF

Saturator Capacity Chart:

Size (in gallons)	Max Load (in lbs)	Min Low Level (in lbs)
55	200	150
70	250	200
110	400	350

Filling/Loading the Saturator:

1. Begin filling the saturator with make-up water, then begin the process of adding NaF powder (this will help keep dust down in the loading process).
2. Add the chemical through the large hinged cover and note level, making sure the crystals are level in the bottom of the saturator.
3. The LOW NaF level label is intended to notify when it is time to refill the saturator. The liquid filling process will take about 20-25 minutes depending on water pressure.

***PLEASE NOTE*:** One of the most common causes of low fluoride residuals in the water of a system that previously worked properly is insufficient NaF material depth in the bottom of the saturator.

Metering Pump Connections:

FluoroPro is designed to have a main and back-up pump mounted on the cover assembly. An alternative is to mount your pumps on an adjacent wall bracket or shelf. In either mounting case, the suction lines for the metering pumps must be fitted with foot valves and strainers and dropped into the pump pickup tubes (2) mounted in the top of the saturator cover. The suction tubing must be straight (no loops).

Maintenance and Cleaning:

Figure 1

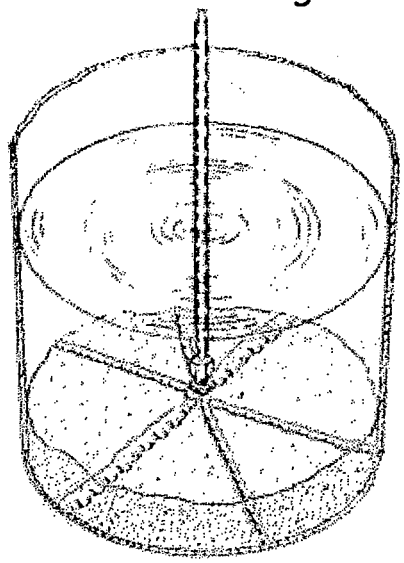

Routine maintenance includes refilling of the saturator to maintain a minimum 12" bed depth. Additionally the bed should be loosened to prevent channeling of the fluoride bed over time. This may be done manually with a piece of PVC piping or a dowel. Use caution to avoid damage to the assembly.

It is recommended that the Fluoride Saturator and its contents be cleaned approximately every twelve months or more frequently if necessary to avoid mineral buildup. It is recommended that the NaF level be 'run-down' as far as possible before starting the maintenance process:

1. Allow the Sodium Fluoride bed level to drop to a point at which the distributor tubes become visible.
2. Shut off the incoming water supply.
3. Disconnect the power supply to the Saturator and to the chemical pump.

(Cleaning Process Continued)

4. Disconnect the tubing connection on the cover assembly for the tubing leading into the saturator (and remove and pumps mounted on cover assembly) to free cover for removal.

5. Remove the distributor assembly from the bottom of the saturator tanks and review each of the six laterals for any signs of clogging.

6. Remove, check, and clean the 2-pump pickup tubes located on the top of the cover assembly, if necessary. This may be done easily between major saturator cleanings.

7. Inspect the level control valve for proper operation. Verify that no clogging has occurred.

8. Look upstream to your back flow preventer and check for any cleanable "Y" strainers to ensure proper flow capacity.

9. Dispose of all NaF residue properly in accordance with state and federal guidelines for such material.

10. Flush interior of tank with water to remove deposits. Clean and flush distributor tube assembly and suction tube strainer.

11. Re-install tube assembly, re-mount pump and refer to the operation section of this instruction sheet for startup instructions.

This space was intentionally left blank for your notes.

Operation:

Prior to start-up sodium fluoride is poured into the saturator tank through the hinged opening in the tank cover. Once the initial bed of sodium fluoride is in place the first fill cycle of the saturator is ready to begin.

As water flow is introduced to the system a distributor assembly at the bottom of the tank allows water to flow through small slits in the 6 laterals radiating from the hub. This distributor assembly allows for even flow, upward, through the fluoride bed.

Once the tank is filled an integral level control system closes a solenoid valve, which is part of the wall mounted control assembly. As the chemical dosing pump draws down the saturated solution, the level control energizes the solenoid valve to re-fill the saturator and maintain the 4% saturated solution.

Please note that the low level circuit has a 5-minute time delay built in to minimize relay chatter, due to wave action in the tank. The high level circuit is an instant cut off to prevent overfilling of the tank.

This space was intentionally left blank for your notes.

FLUORIDE SATURATOR INSTRUCTIONS

INSTALLATION
OPERATION
MAINTENANCE

LMI
LIQUID METRONICS DIVISION
MILTON ROY

ISO 9001 Certified • a unit of Sunstrand Corporation

8 Post Office Square
Acton, MA 01720 USA
Tel (508) 263-9800
Fax (508) 264-9172

Replaces same of Rev. D 11/94
1075. E 8/96

I. UNPACKING

1. The LMI Model 28850 Fluoride Saturator is shipped in two cartons ; one containing the 50 gallon polyethylene tank and the other containing the cover assembly, distributor tube assembly, polyethylene inlet tubing, distributor anti-rise pipe and 1/4" NPT male connector.

II. INSTALLATION

1. Install suction tube strainer (Key No.34 on Parts List) by removing metal conduit nut from threaded connector. Insert threaded connector up through saturator cover and hand tighten conduit nut to hold strainer firmly to cover.
2. Reassemble liquid level switch by sliding large white coupling nut up to saturator cover. While pushing the liquid level switch firmly up towards the cover hand tighten the nut onto the threaded connector.
3. Cut clear, flexible vinyl tubing to 34" length and add a tubing insert (Key No. 32 on Parts List) to each end. Slip free end of tubing into connector at outlet of syphon breaker and tighten compression nut until tubing is held securely. Slide PVC anti-rise pipe over tubing. Connect other end of tubing to distributor tube assembly in same manner. Distributor tube assembly should rest just at bottom of tank. (See Fig. 2)

NOTE: Tank bottom requires full, flat support - no overhang

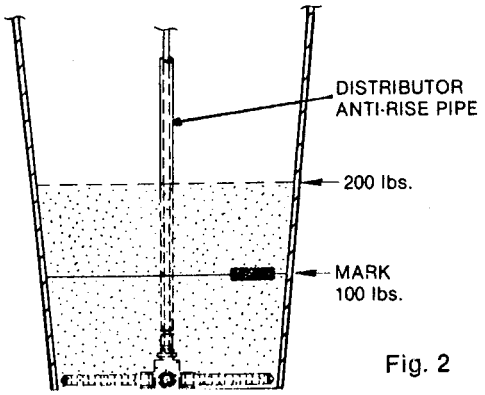

Fig. 2

4. Mount Cover Assembly on tank.
5. Position Saturator so as to facilitate plumbing of fresh water inlet line and overflow connections. All plumbing to and away from Saturator is customer supplied. (See Typical Installation, pg. 4)

NOTE: All user supplied plumbing must be approved under local plumbing codes

6. Connect 1/4" NPT male x 3/8" OD tubing connector to inlet water supply piping; it is recommended that a shut off valve be installed before the connection to allow for easy replacement of tubing a servicing of Saturator. It is also recommended that a user supplied Y strainer be in stalled on inlet line. Route stiff, white tubing from connector to inlet of Saturator Cover Assembly.
7. Slip ends of tubing through connectors at both ends and tighten compression nuts until tubing is held securely.

NOTE: Inlet water pressure must not exceed 120 PSI (8.6 BAR)

8. An overflow connection have been installed on the tank (3/4" NPT female). Plumbing from this connection should now be completed.
9. The LMI chemical metering pump is mounted in the recess provided on the cover assembly.
10. The pump suction tubing should be cut so as to allow the foot valve assembly to sit at the bottom of the suction tube strainer after connection to the pump suction valve assembly. To accomplish this, connect the suction tubing to the foot valve assembly and drop into the suction tube strainer until it rests at the bottom, then cut the tubing at the appropriate height to allow connection to the suction valve fitting. Adjust and operate the pump as required.

III. OPERATION

1 Open hinged cover and add 100 lbs. (45kg) of Sodium Fluoride to the tank. Evenly distribute powder/crystals and mark outside wall of the tank at the level of the Sodium Fluoride bed. (See Fig.2)
2. Deposit an additional 100 lbs. of Sodium Fluoride , for a total of 200 lbs. start up quantity. Close hatch cover.
3. Open water supply to Saturator.

NOTE: If water hardness causes scale build up, a user supplied water softener should be installed in the supply line ahead of the Saturator.

4. Connect the Saturator power supply cord to a grounded 115VAC electrical source capable of supplying 25 watts. This Saturator is equipped with a built in time delay relay. Opening of solenoid valve and water flow into tank will be delayed 5 to 6 minutes after connection to the power source. When fill cycle begins water will flow into tank, through distributor tube assembly, dissolving the Sodium Fluoride. At the proper level the liquid level switch will automatically close the solenoid valve. In this way the proper solution level is maintained in the Saturator tank as saturated solution is pumped out.
5. The level of the Sodium Fluoride bed in the saturator tank should be checked daily. Push and hold the button switch on the cover to activate the light inside the tank for visual inspection of Fluoride level. When the level drops to a minimum 100 lb.mark an additional 100 lbs. should be added.
6. The float switch should be checked periodically and hosed with clear water if there are any signs of crystalline deposits.

NOTE: It will always take a minimum of 5 to 6 minutes before solenoid valve re-opens after float triggers time delay relay. This is to prevent rapid fill cycles as a result of waves on the fluoride solution surface. Time delay also occurs each time the unit is unplugged and reconnected to power. Light and switch are 12 volts AC.

IV. CLEANING

1. It is recommended that the Fluoride Saturator be cleaned approximately every twelve months or more frequently if necessary.

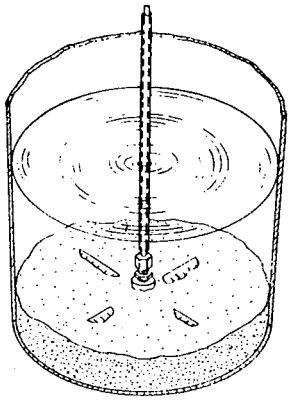

Fig. 3

2. Allow the Sodium Fluoride bed level to drop to a point at which the distributor tubes become visible. Valve off inlet water.(See Fig.3)
3. Disconnect the power supply to the Saturator and to the chemical pump and remove the pump from the cover.
4. Disconnect tubing from underside of Cover Assembly. Remove cover being careful not to hit float switch assembly against side of tank. Attempt to raise and remove the distributor tube assembly. **DO NOT FORCE** Stirring may be necessary to dislodge distributor tube assembly if embedded. Use caution to avoid damage too assembly. Replace No. 10469 vinyl tubing if necessary.
5. Flush interior of tank with water to remove deposits. Clean and flush distributor tube assembly and suction tube strainer.
6. Re-install tube assembly, remount pump and refer to Section III for start-up instructions.

V. TYPICAL INSTALLATION

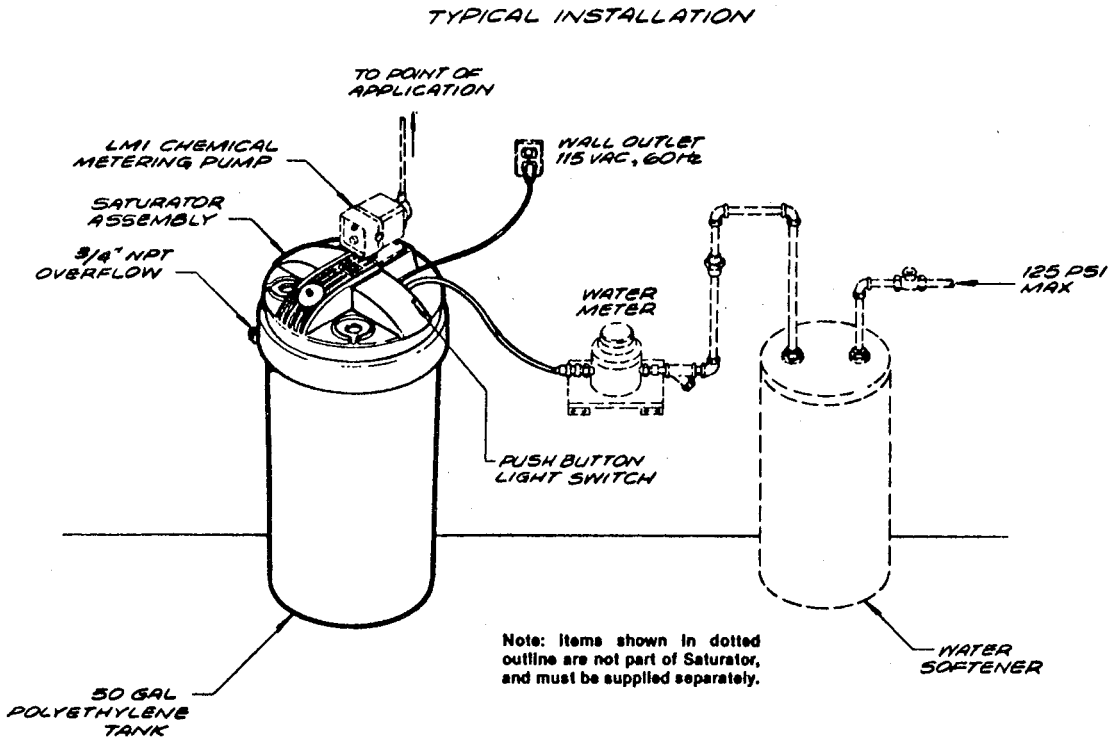

VI. DIMENSIONAL DRAWING
All Dimensions In Inches